REV	BY	DATE	DESCRIPTION
-	LF	15.02.2023	ORIGINAL DRAWING

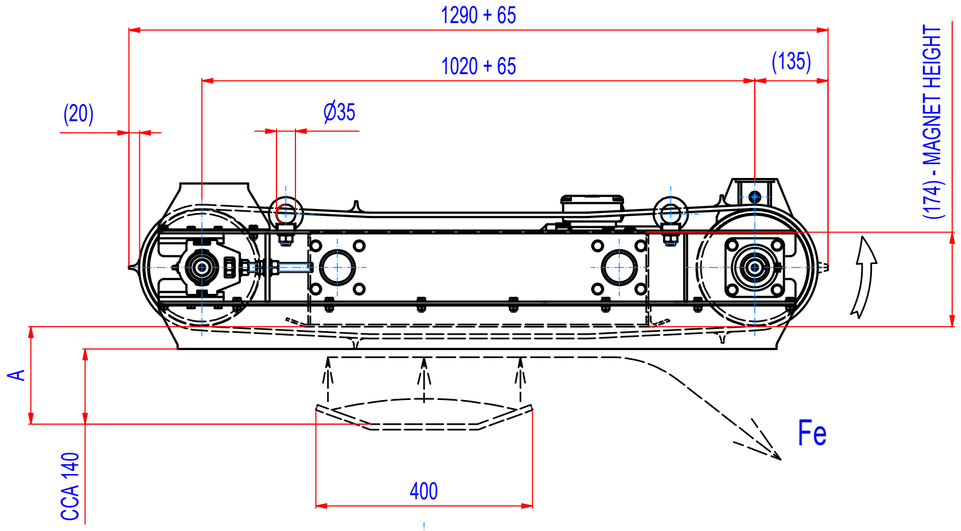

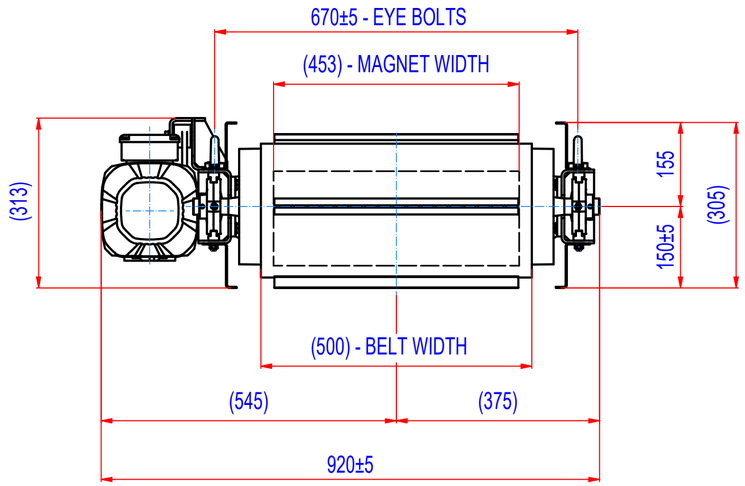

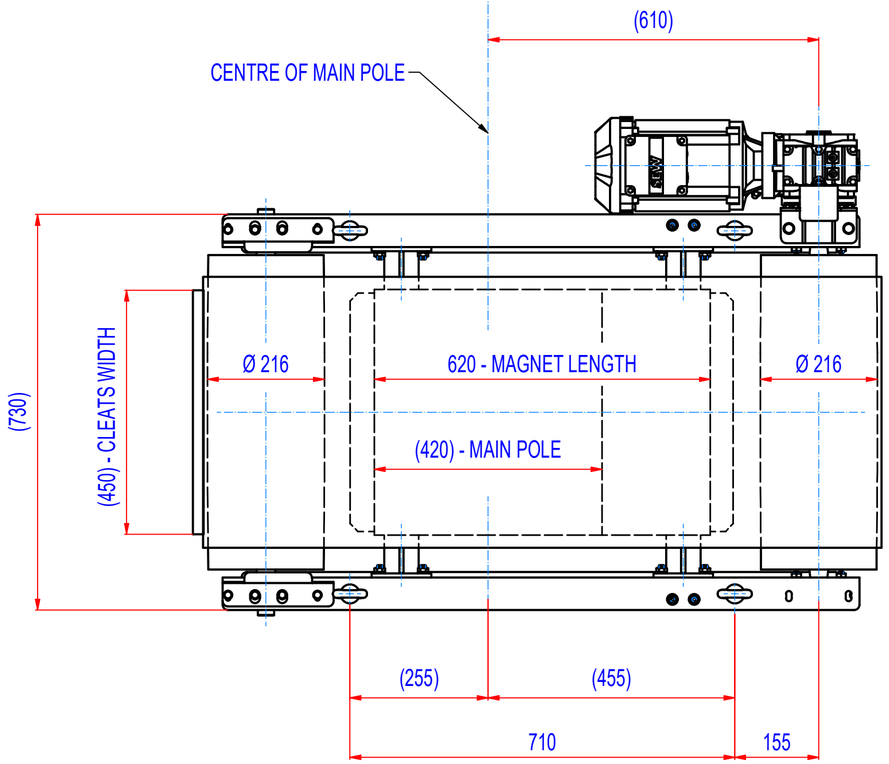

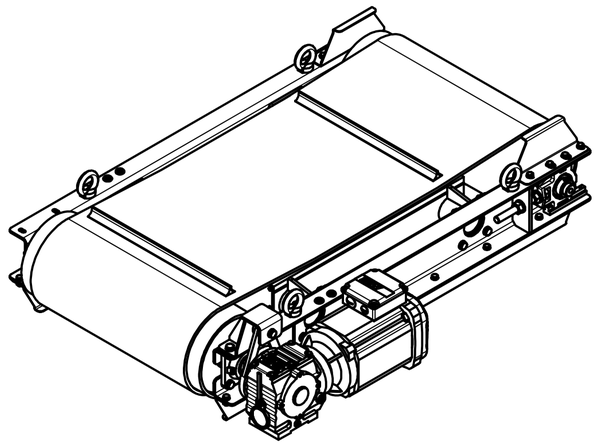

A = 280 mm - max. catch distance for rod Ø15, L=75 mm (VDE)
A = 180 mm - 400 Gs

- GEARED BOX SEW SA47TDRN90L4, i=10,8 (135RPM), MOTOR 230/400V, 1,5kW, 50Hz, IP55
- ROLLER SPEED 135/min
- BELT EP250/2 3+1, WIDTH 500, LENGTH 2750, 5 CLEATS T20/10, WIDTH 450
- BELT SPEED 1,5m/s

Sheet: A2	Extra info:		General tolerance: ISO 2768 - cL
Drawn: LF	Weight (kg): 359,4 kg		Drawn according: ISO268; ISO1101; ISO2553
Date: 15.2.2023	GOUDSMIT MAGNETICS		Status:
Predecessor: SEPB040032			Customer reference number:
Quick search: XSPB 2			Product key: ROP-F2-C-040-W-G-L-B-B-B-NA
Description: Overband separator, Ferrite, Size 2, W0400, Cross			Part number: ROFC040320 Rev: -

© All rights reserved. Reproduction is not permitted without written permission of GOUDSMIT Magnetic Systems BV