REV	DATE	BY	DESCRIPTION
-	01.09.2023	PH	Source RONC065341, size 3

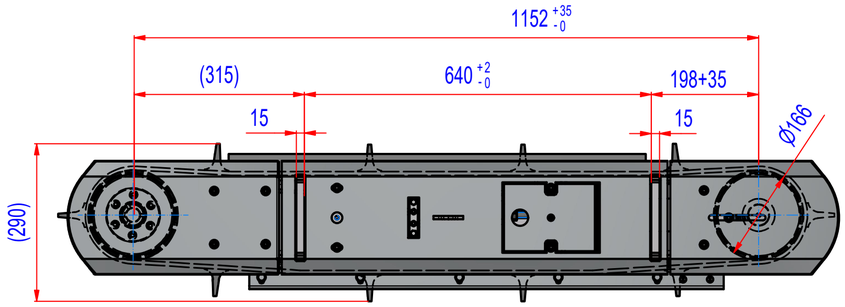

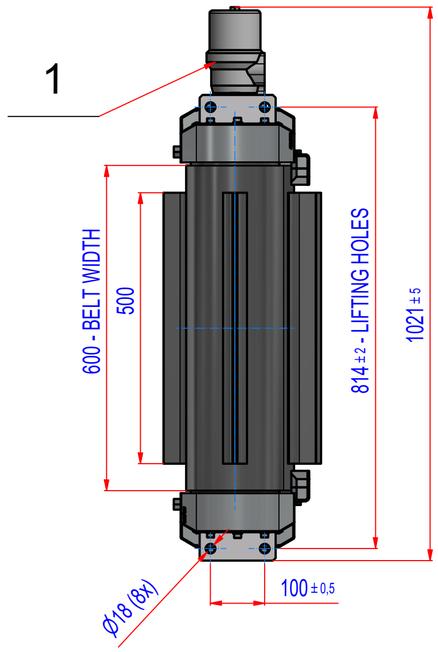

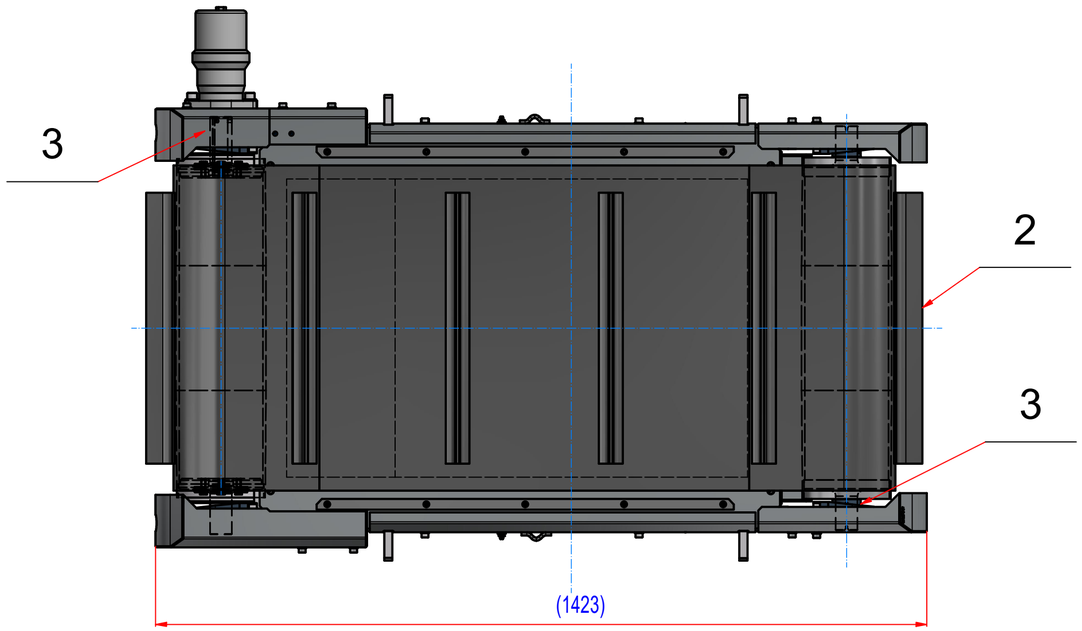

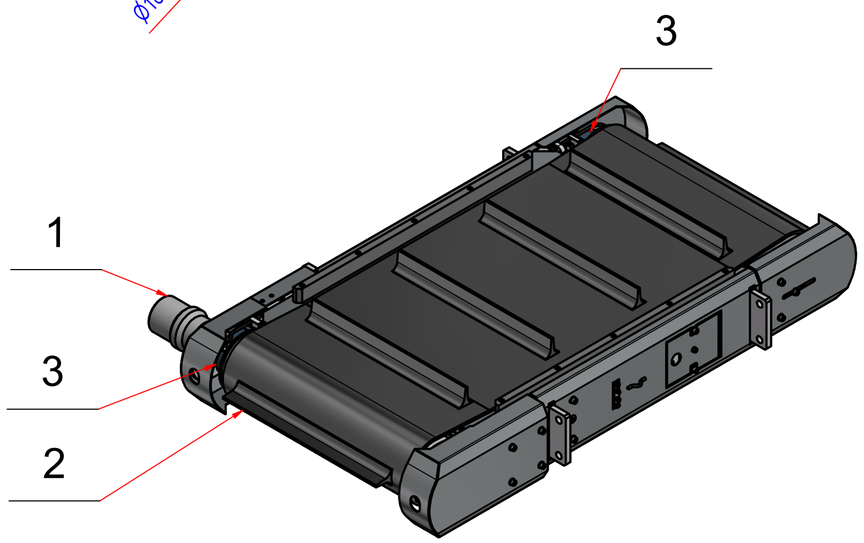

POS.	PART NUMBER	DESCRIPTION	MATERIAL	WEIGHT	QTY
3	15_8900041	Bearing assy PSHEY 40		0,3	4
2	45_4060012	Belt EP250, w=600, L=2850	RUBBER	15,3	1
1	76_4090013	Hydromotor OMR X 315, 11186652		9	1

Sheet: A2	Extra info:	General tolerance: ISO 2768 - cL	
Drawn: PH	Weight (kg): 332.2	Drawn according: ISO268; ISO1101; ISO2553	
Date: 01.09.2023	GOUDSMIT MAGNETICS	Status:	
Predecessor:		Customer reference number:	
Quick search:		Product key: ROP-N3-C-065-W-H-R-B-B-M-NA	
Description: SPARE PARTS for overband magnet, NdFeB, size.3, W650		Part number: RONC065531_SP	Rev: -

© All rights reserved. Reproduction is not permitted without written permission of GOUDSMIT Magnetic Systems BV