REV	DATE	BY	DESCRIPTION
-	25.08.2023	PH	Source RONC120341, size 3

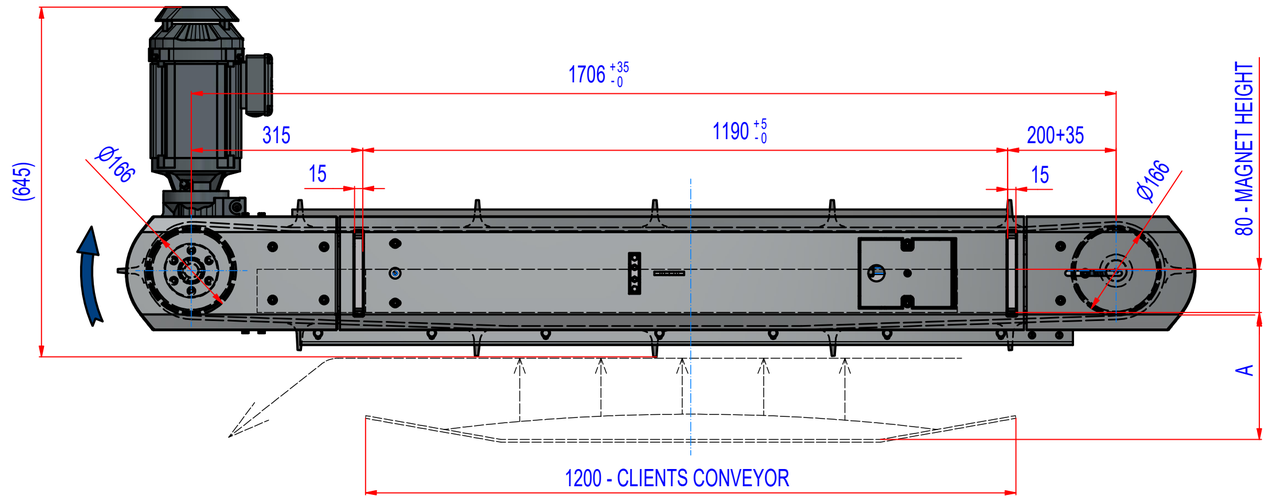

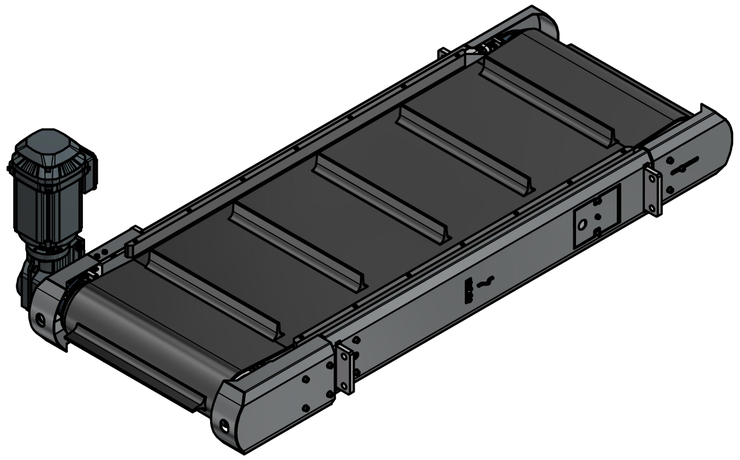

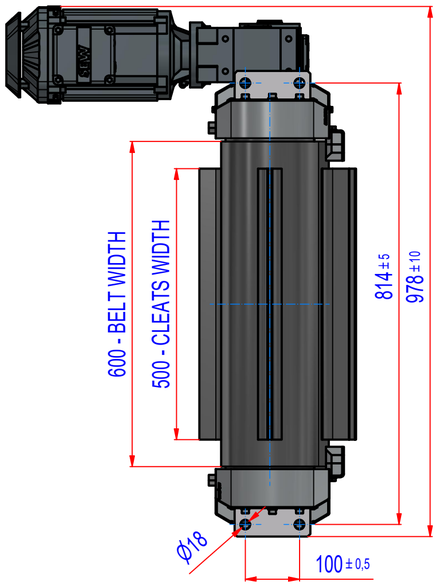

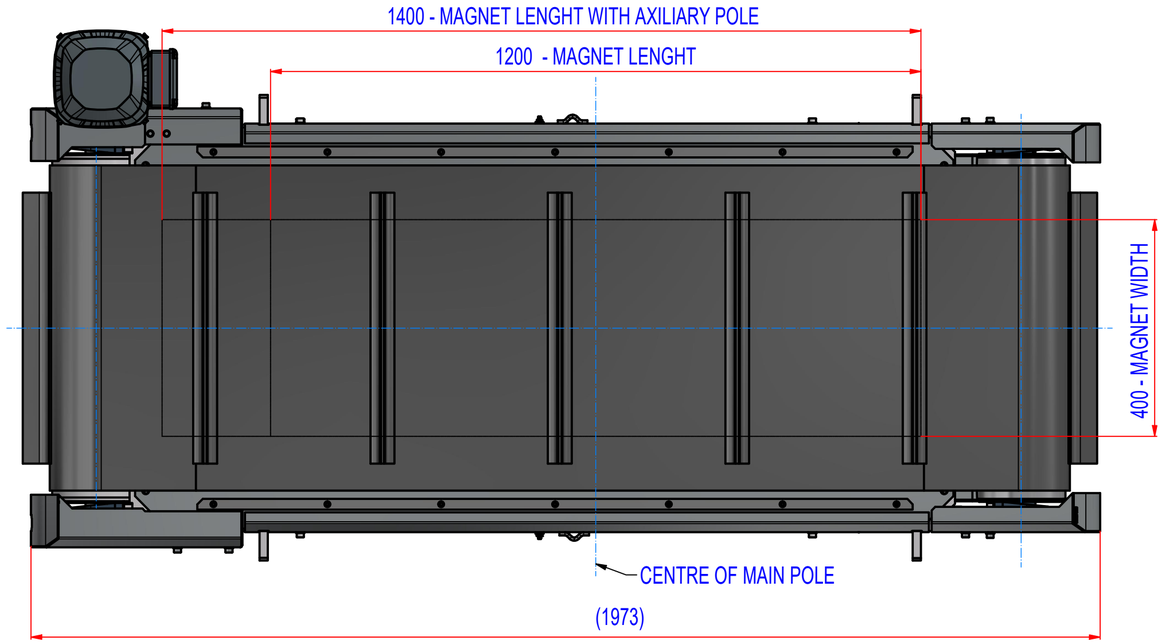

A = 310 mm - max. catch distance for rod Ø15, L=75 mm (VDE)
A = 215 mm - 400 Gs

MAGNET :	MAGNETS NdFeB, FERRITTE, WATERPROOF
FRAME:	MADE FROM AISI 304
PROTECT PLATES:	AISI 304, 2-3mm
BELT TYPE:	EP250/2 3+1,5, WIDTH 600, LENGTH 3950, 12 CLEATS T50/20, WIDTH 500
MOTOR:	SEW KA37DRN90L4-C, i=7,96 (184RPM), 230/400V, 1,5kW, IP55
ACCESSORIES:	FRAME SIDE COVERS GREASING FROM LEFT AND RIGHT SIDE

Sheet: A2		Extra info:	General tolerance: ISO 2768 - cL
Drawn: PH	Weight (kg): 505,3		Drawn according: ISO268; ISO1101; ISO2553
Date: 25.08.2023		GOUDSMIT MAGNETICS	Status:
Predecessor:			Customer reference number:
Quick search:		© All rights reserved. Reproduction is not permitted without written permission of GOUDSMIT Magnetic Systems BV	Product key: ROP-N3-C-120-W-G-R-B-B-M-NA
Description: Overband magnet, NdFeB, size.3, W=1200, gear motor			Part number: RONC120331 Rev: -