Goudsmit Magnetic Systems
Petunialaan 19
5582 HA Waalre
The Netherlands
Phone +31 (0)40 - 2213283

Customer Name:	Customer Name xxxxx
Customer Number:	Customer Number XXXXXX
Country:	The Netherlands
Language:	English

Project Name:	Control box
Project Number:	project Number xxxxx
Product Description:	RHPS-E-CB-NA-LC-HW-FD1
Product Number:	E0122431
Make:	TNR

Designer:	mv	Supply Voltage:	400 VAC
Design Date:	12-9-2022	Nominal Power:	4.7 kW
Edit Date:	14-9-2022	Max Supply Current:	16 A
Revision Number:	Rev D	Control Voltage:	24V DC
Revision Status:		ATEX:	No Atex

Number of pages 24

Project overview

PAGE NUMBERING	
1	Title page
2	Project Overview
3	Revision overview
4	Page overview
100	Mains supply
110	Power supplies
150	Main circuit
200	Control Circuit
300	-
400	PLC overview
500	PLC I/O
600	-
700	-
800	Cabinet Layout
900	Bill of material
920	Components list
940	Terminal Plan
990	Textplates

TERMINAL NUMBERING	
X0	Mains supply
X1	Main power
X2	Control Voltage 230VAC
X3	Control Voltage 24 VAC
X4	Control Voltage 24 VDC
X5	Analog Signals (Field)
X6	Digital Signals (Field)
X7	External Signals (Customer)
X8	EEX i
X9	-

100M1

REFERENCE NUMBER
PART CODE
PAGE NUMBER

COLOR CODE INTERNAL WIRING		
Main voltage 400/230VAC	Phase	Black
	Neutral	Lightblue
	Earth	Yellow/Green
Control voltage 230VAC	Phase	Red
	Switch wire	Red
	Neutral	Red
Control voltage 24VAC	Phase (L)	Grey
	Switch wire	Grey
	Neutral (N)	Grey
Control voltage 24VDC	Phase (+)	Darkblue
	Switch wire	Darkblue
	Neutral (-)	Darkblue
Control voltage 12VDC	Phase (+)	White
	Switch wire	White
	Neutral (-)	White
Measurement		Purple
External signals (potential free contacts)		Orange
EEx i		Blue

Revision Overview

Revision Number	Revision Comment	Engineer	Last Revision Date
D	Schematic converted to E-Plan. Wire colors vibration sensor added. Note for rotation sensor added.	mv	12-09-2022

Table of contents

Column X: An automatically generated page was edited

Page	Page description	Revision	Date	Edited by	X
/1	Title Page		12-8-2022	mv	
/2	Project Overview		10-8-2022	mv	
/3	Revision Overview		12-9-2022	mv	
/4	Page Overview		14-9-2022	mv	
/100	Mains Power		13-9-2022	mv	
/110	Power Supplies		14-9-2022	mv	
/150	Main Circuit		14-9-2022	mv	
/155	Main Circuit		13-9-2022	mv	
/156	Main Circuit		13-9-2022	mv	
/160	Main Circuit		13-9-2022	mv	
/200	Control Circuit 24VDC		14-9-2022	mv	
/220	Control Circuit 24VDC		14-9-2022	mv	
/230	Control Circuit Status		13-9-2022	mv	
/240	Control Circuit Rotation Detection		13-9-2022	mv	
/800	Cabinet Layout		14-9-2022	mv	
/900	Bill of material		14-9-2022	mv	
/901	Bill of material		14-9-2022	mv	
/920	Components List		14-9-2022	mv	
/940	Terminal Plan		13-9-2022	mv	
/941	Terminal Plan		13-9-2022	mv	
/942	Terminal Plan		13-9-2022	mv	
/942.a	Terminal Plan		13-9-2022	mv	
/943	Terminal Plan		13-9-2022	mv	
/990	Textplates		5-9-2022	mv	

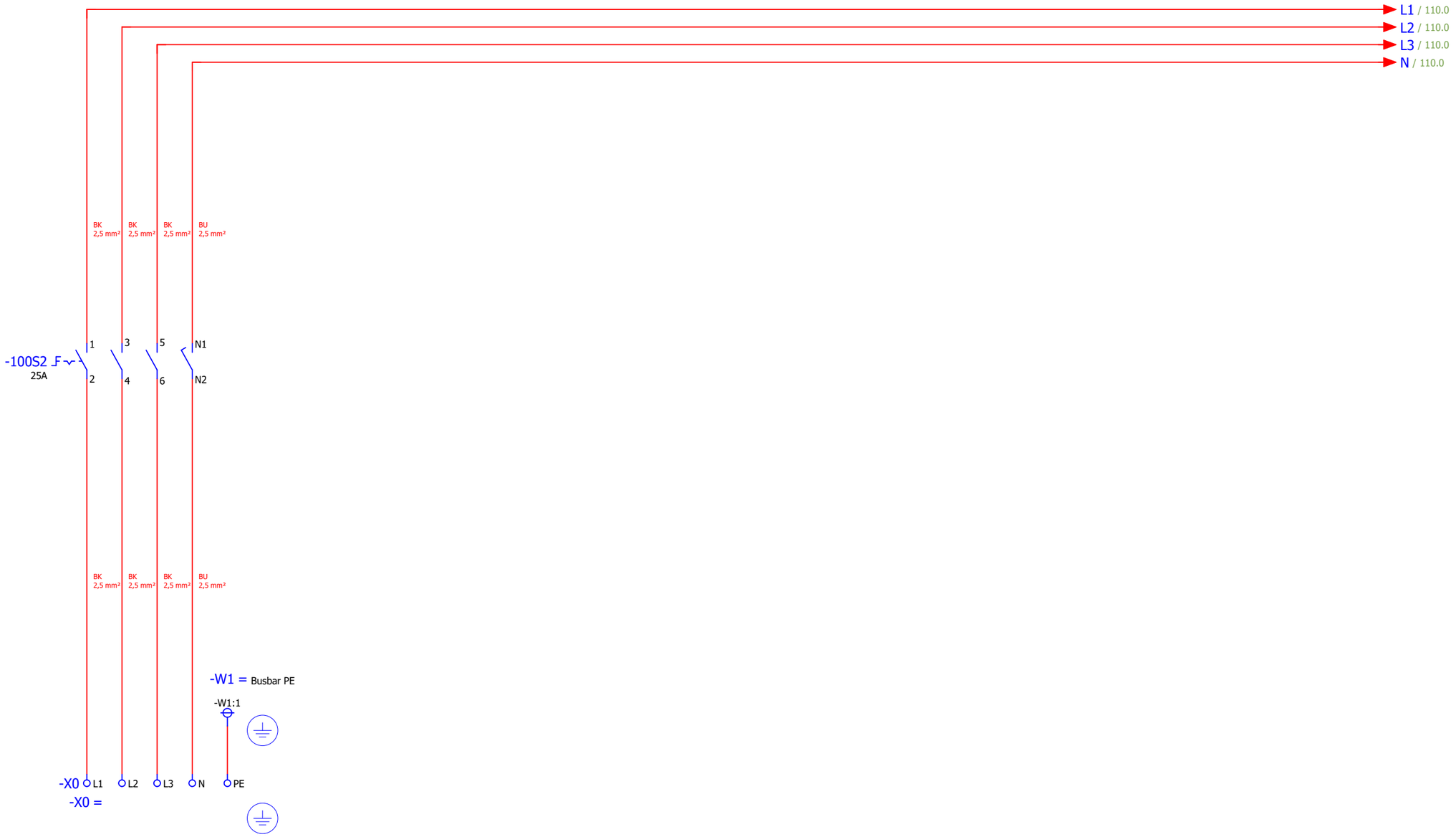

Main Power Supply
3x400VAC + N + PE / 50Hz
Fuse max. 16A

			Date	14-9-2022	Control box project Number xxxxx		Goudsmit Magnetic Systems	RHPS-E-CB-NA-LC-HW-FD1 E0122431	Mains Power	=
			Ed.	mv			GOUDSMIT MAGNETICS			+
			Appr.							Page 100
Modification	Date	Name	Original		Replacement of	Replaced by				Page 5 / 24

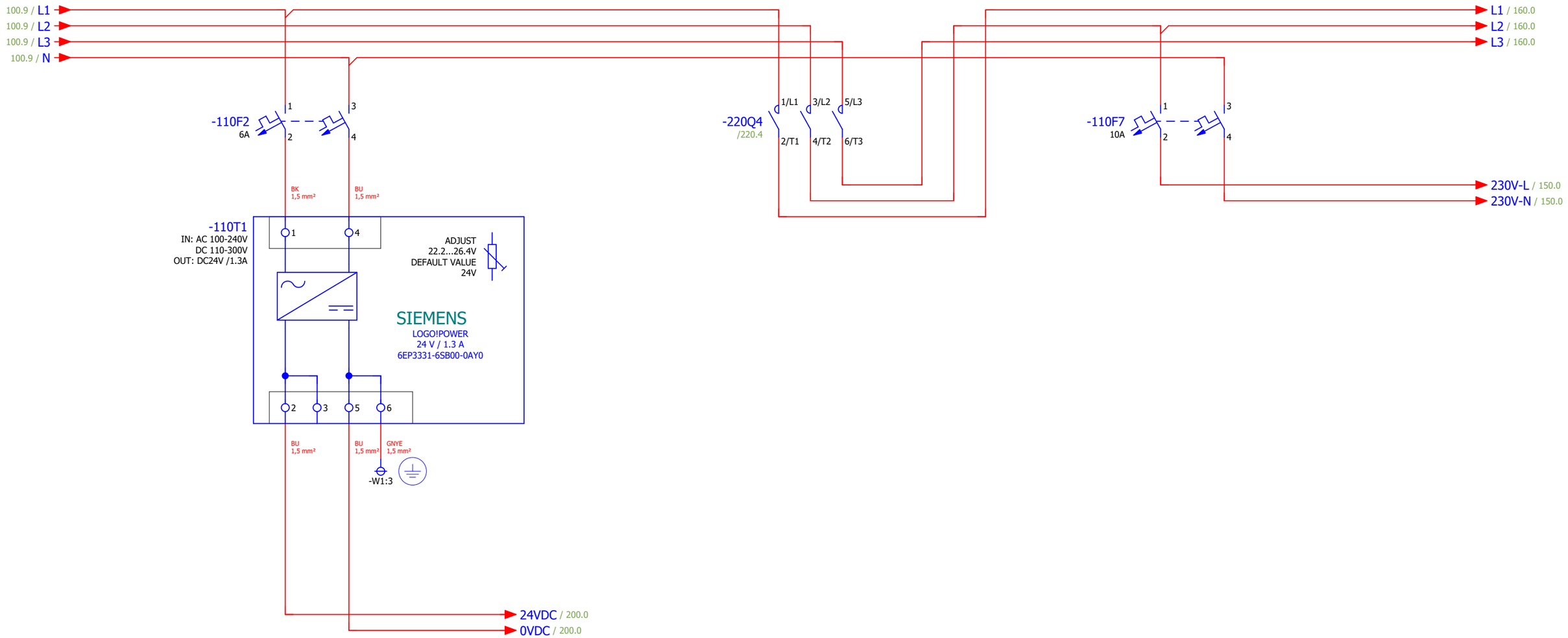

Control Circuit
Power Supply 24 VDC

100 150

			Date	14-9-2022	Control box project Number xxxxx	Goudsmit Magnetic Systems
			Ed.	mv		
			Appr.			
Modification	Date	Name	Original		Replacement of	Replaced by

GOUDSMIT MAGNETICS

RHPS-E-CB-NA-LC-HW-FD1
E0122431

Power Supplies

=
+
Page 110
Page 6 / 24

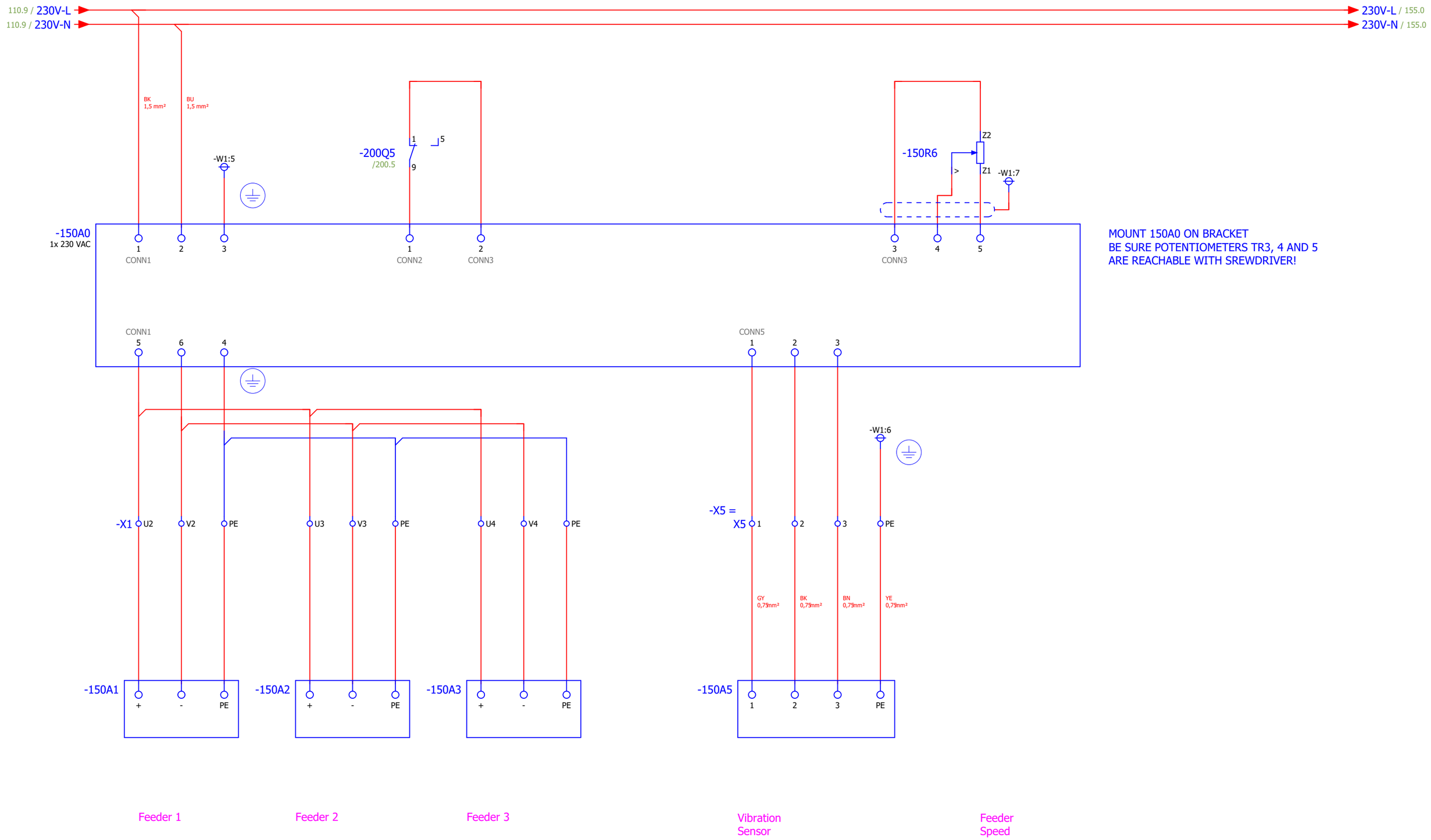

			Date	14-9-2022	Control box project Number xxxxx		Goudsmit Magnetic Systems	RHPS-E-CB-NA-LC-HW-FD1 E0122431	Main Circuit	=
			Ed.	mv			GOUDSMIT MAGNETICS			+
			Appr.							Page 150
Modification	Date	Name	Original		Replacement of	Replaced by				Page 7 / 24

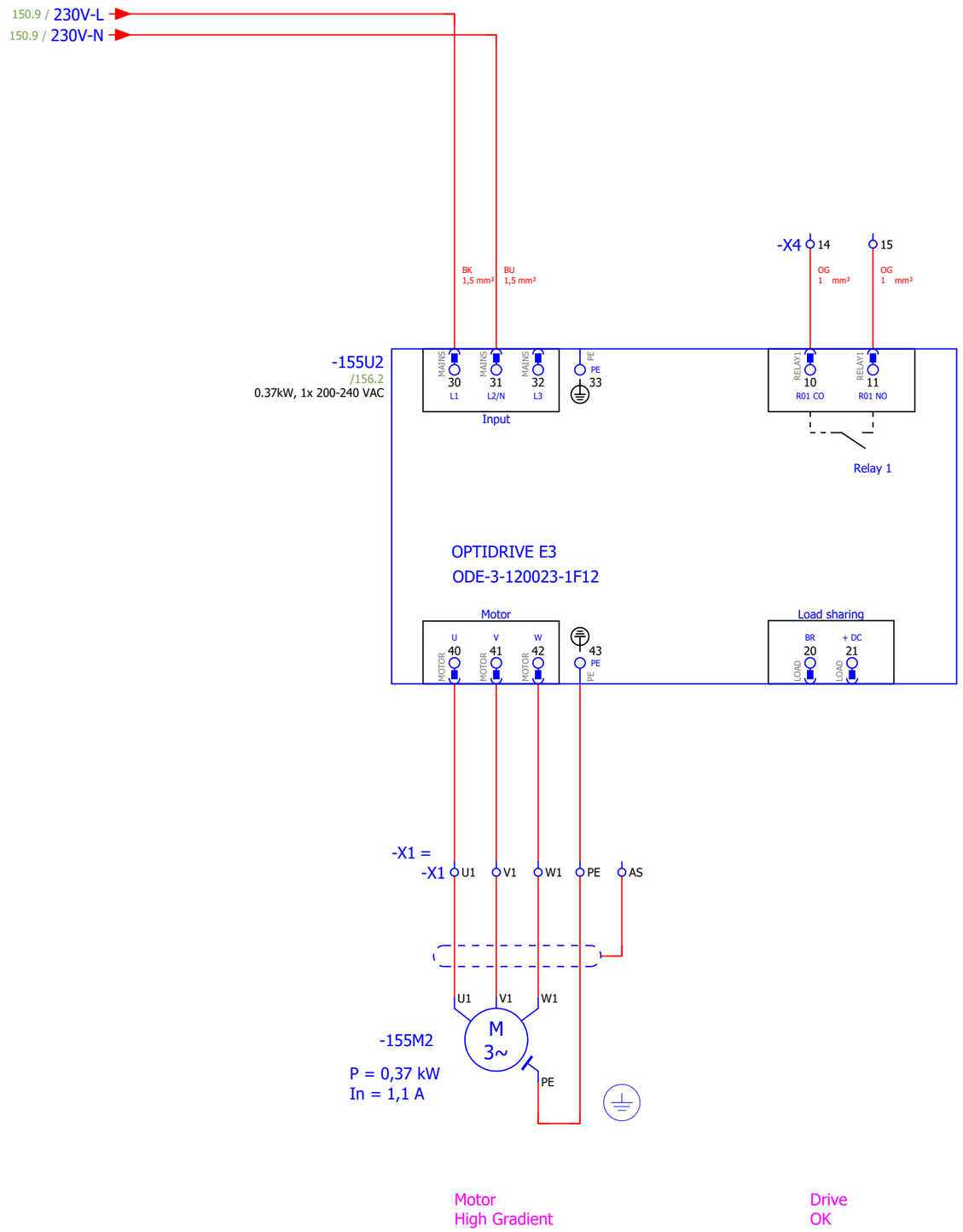

			Date	13-9-2022	Control box project Number xxxxx		Goudsmit Magnetic Systems	RHPS-E-CB-NA-LC-HW-FD1 E0122431	Main Circuit	=
			Ed.	mv			GOUDSMIT MAGNETICS			+
			Appr.							Page 155
Modification	Date	Name	Original		Replacement of	Replaced by				Page 8 / 24

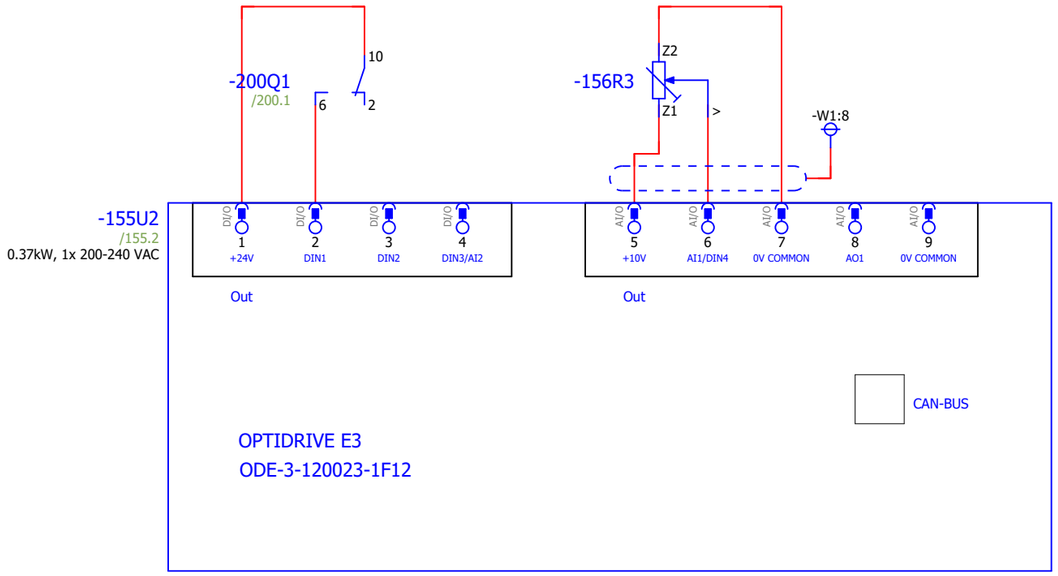

Belt
Speed

155 160

			Date	14-9-2022	Control box project Number xxxxx	Goudsmit Magnetic Systems	RHPS-E-CB-NA-LC-HW-FD1 E0122431	Main Circuit	=
			Ed.	mv		GOUDSMIT MAGNETICS			+
			Appr.						Page 156
Modification	Date	Name	Original		Replacement of	Replaced by			Page 9 / 24

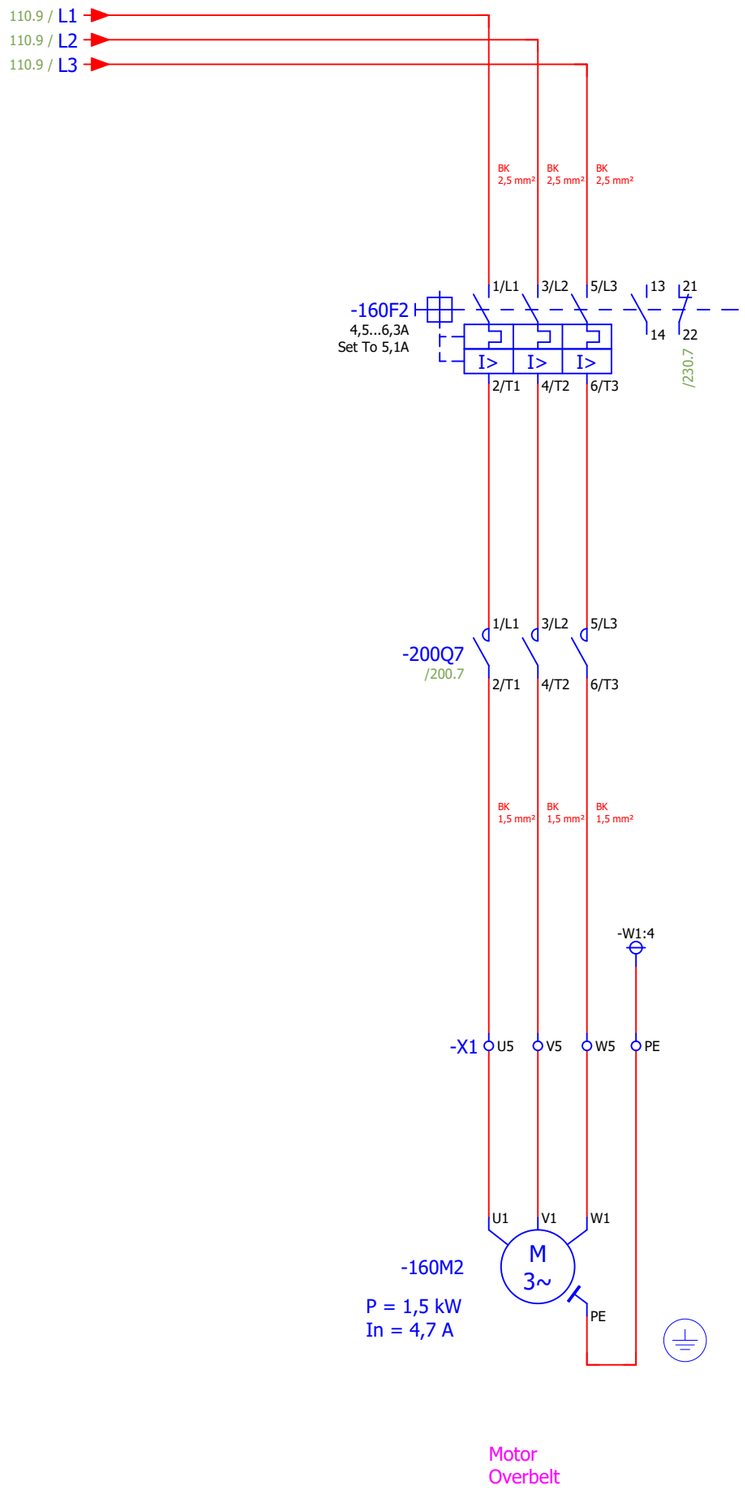

			Date	13-9-2022	Control box project Number xxxxx		Goudsmit Magnetic Systems	RHPS-E-CB-NA-LC-HW-FD1 E0122431	Main Circuit	=
			Ed.	mv						+
			Appr.							Page 160
Modification	Date	Name	Original		Replacement of	Replaced by				Page 10 / 24

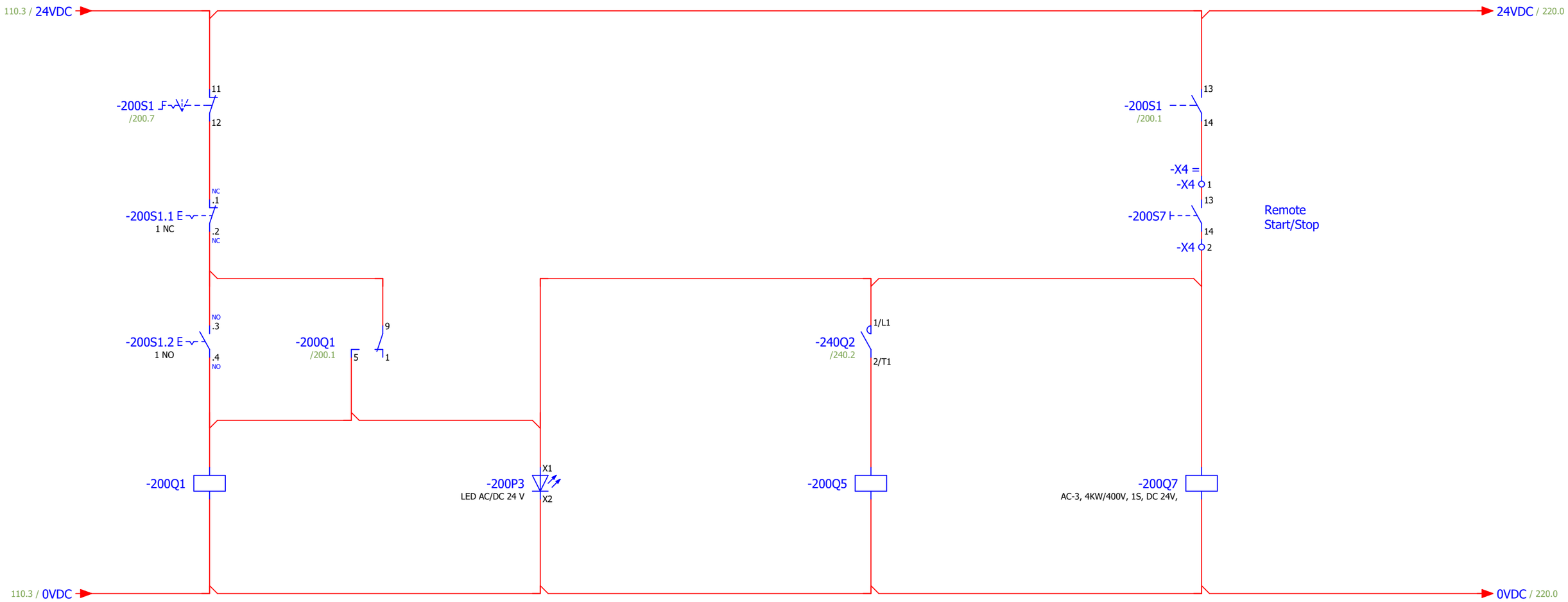

On/Off
Belt
High Gradient

5
1 — 9 /200.2
6
2 — 10 /156.2
7
3 — 11 /230.1
8
4 — 12

Belt
On

On/Off
Feeder

5
1 — 9 /150.2
6
2 — 10 /230.2
7
3 — 11
8
4 — 12

On/Off
Overbelt

1/L1 — 2/T1 /160.2
3/L2 — 4/T2 /160.2
5/L3 — 6/T3 /160.2
13 — 14 /230.8

160

220

			Date	14-9-2022	Control box project Number xxxxx	Goudsmit Magnetic Systems	RHPS-E-CB-NA-LC-HW-FD1 E0122431	Control Circuit 24VDC	=	
			Ed.	mv		GOUDSMIT MAGNETICS			+	
			Appr.							Page 200
Modification	Date	Name	Original		Replacement of	Replaced by				Page 11 / 24

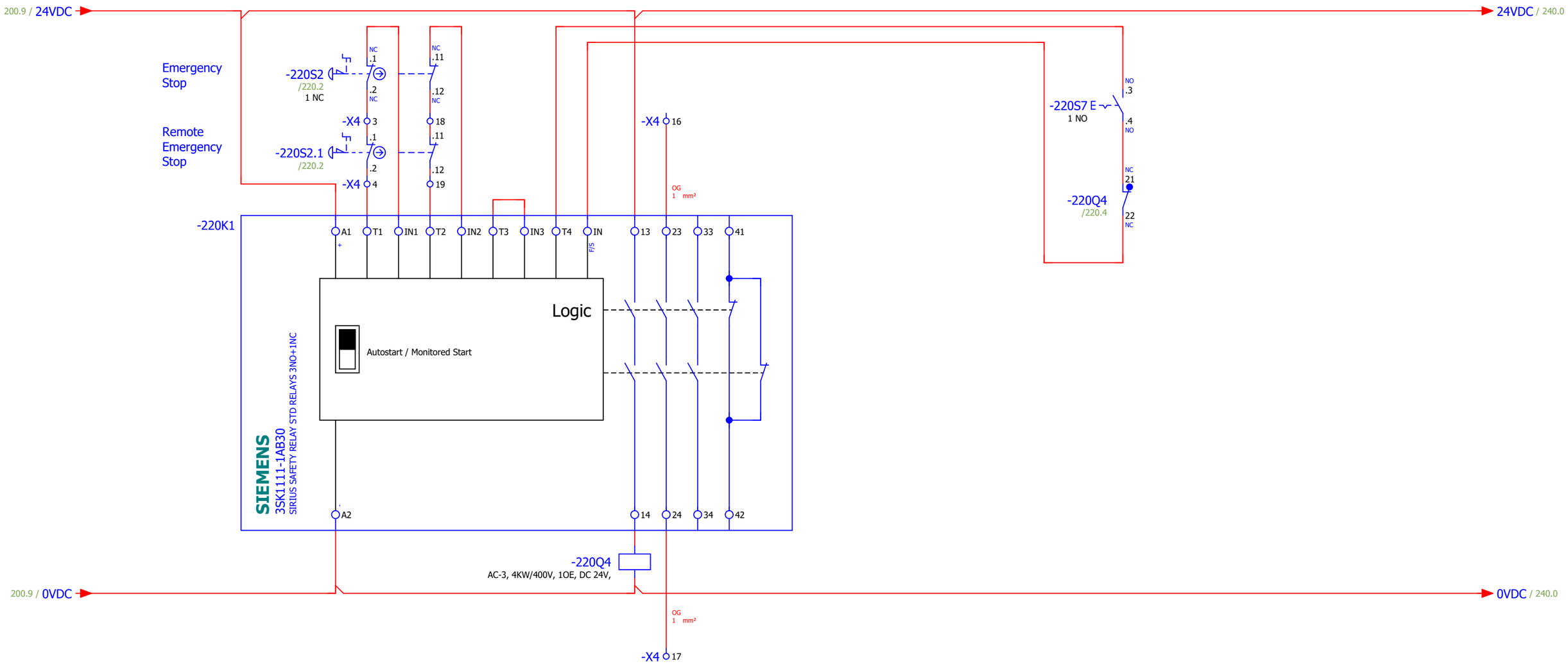

Emergency Stop

Reset Emergency Stop

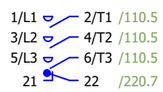

200 230

			Date	14-9-2022	Control box project Number xxxxx		Goudsmit Magnetic Systems	RHPS-E-CB-NA-LC-HW-FD1 E0122431	Control Circuit 24VDC	=
			Ed.	mv						+
			Appr.							Page 220
Modification	Date	Name	Original		Replacement of	Replaced by				Page 12 / 24

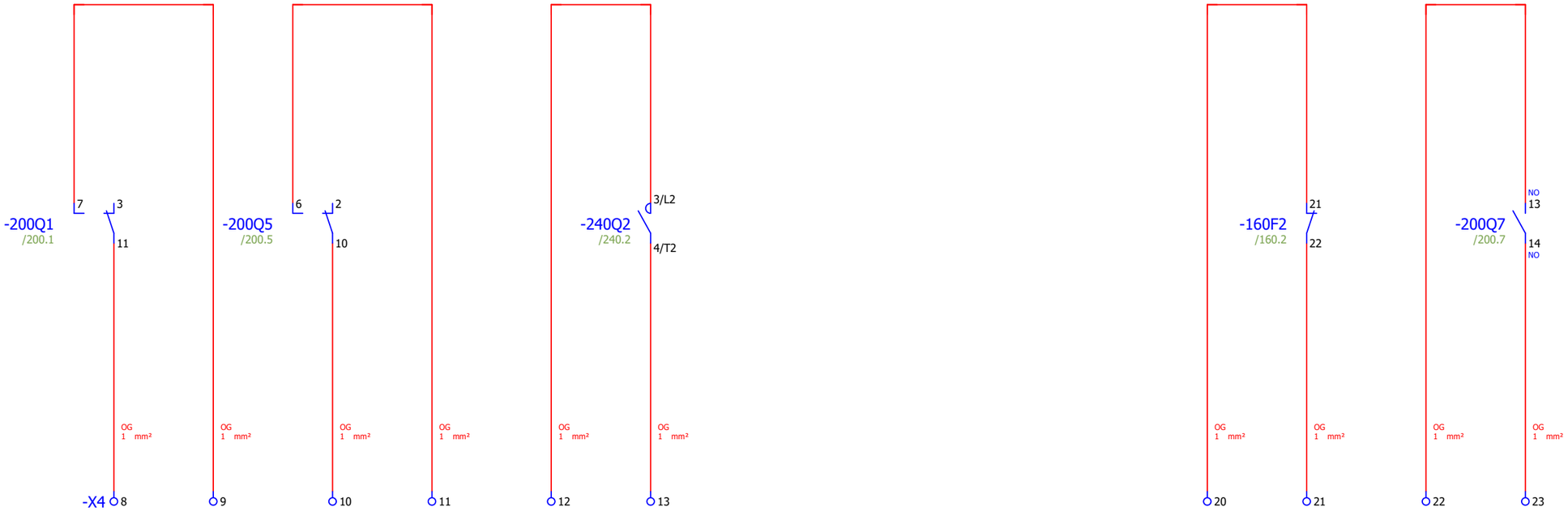

Belt
On

Feeder
On

Rotation
Detection

Thermal Contact
Overbelt

Overbelt
On

			Date	13-9-2022	Control box project Number xxxxx	Goudsmit Magnetic Systems	RHPS-E-CB-NA-LC-HW-FD1 E0122431	Control Circuit Status	=
			Ed.	mv		GOUDSMIT MAGNETICS			+
			Appr.						Page 230
Modification	Date	Name	Original		Replacement of	Replaced by			Page 13 / 24

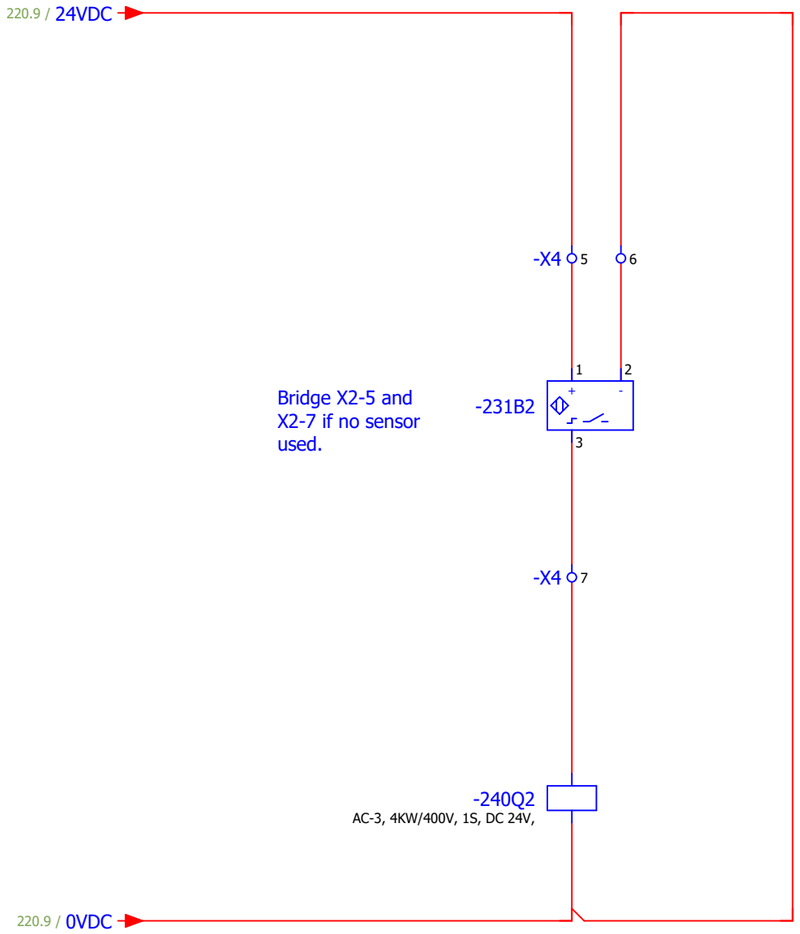

Rotation
Detection

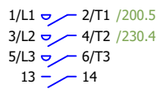

230 800

			Date	13-9-2022	Control box project Number xxxxx	Goudsmit Magnetic Systems	RHPS-E-CB-NA-LC-HW-FD1 E0122431	Control Circuit Rotation Detection	=
			Ed.	mv					+
			Appr.						Page 240
Modification	Date	Name	Original		Replacement of	Replaced by			Page 14 / 24

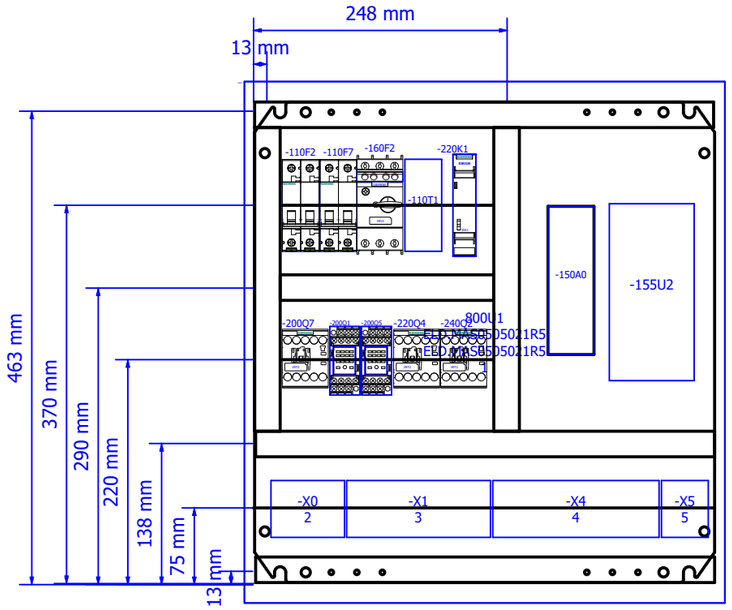

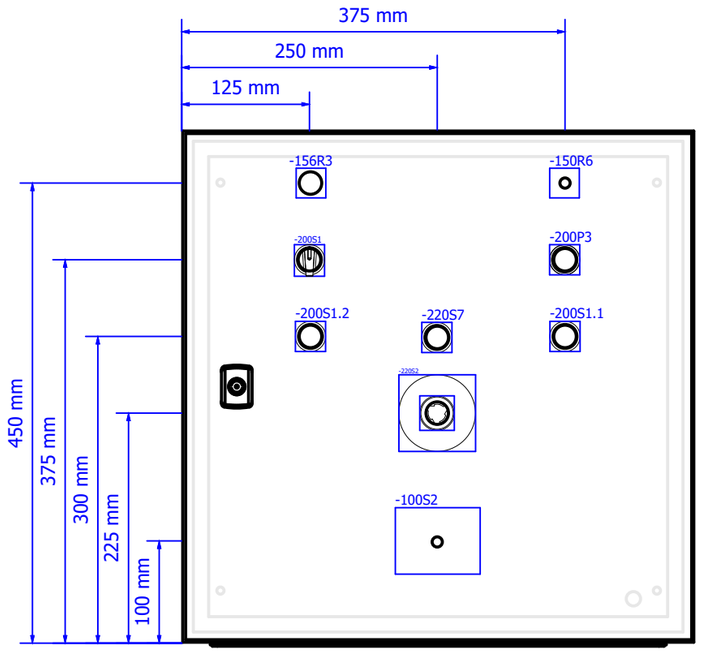

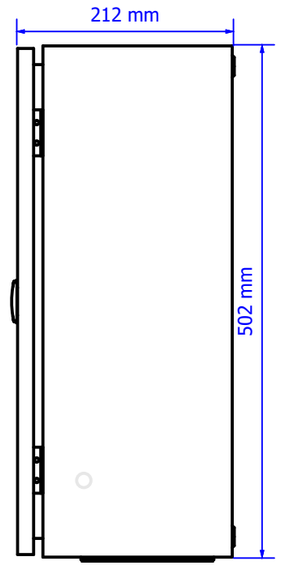

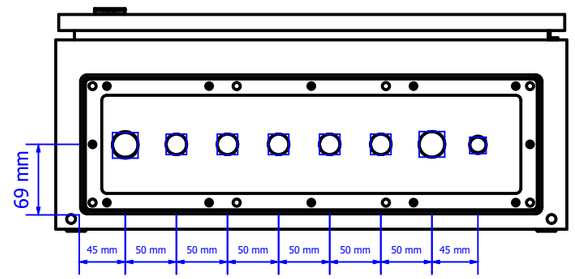

240

900

			Date	14-9-2022	Control box project Number xxxxx	
			Ed.	mv		
			Appr.			
Modification	Date	Name	Original		Replacement of	Replaced by

Goudsmit Magnetic Systems

RHPS-E-CB-NA-LC-HW-FD1

E0122431

Cabinet Layout

=

+

Page 800

Page 15 / 24

Bill of material

Quantity	Description	Type number	Part Number	Supplier	Isah Number
1	CONTROL CIRCUIT FOR INVICON TT036 AND TT038	CV6FS	PV CV6FS A2 STD	MP Elettronica	EIUG000001
0					
1	CIRCUIT BREAKER 6KA 2POL C6	5SY6206-7	5SY6206-7	Siemens	E0025015
1	CIRCUIT BREAKER 6KA 2POL C10	5SY6210-7	5SY6210-7	Siemens	EIHD042006
1	CIRCUIT-BREAKER SCREW CONNECTION 6.3A	3RV2011-1GA10	3RV2011-1GA10	Siemens	E0029956
1	TRANSVERSE AUX. SWITCH, 1NO+1NC, SCREW CONNECTION,	3RV2901-1E	3RV29011E	Siemens	E0025012
1	SIRIUS SAFETY RELAY STD RELAYS 3NO+1NC	3SK1111-1AB30	3SK1111-1AB30	Siemens	E0029943
1	LED MODULE, GREEN	3SU1401-1BB40-1AA0	3SU1401-1BB40-1AA0	Siemens	EIFD403002
1	INDICATOR LIGHT, GREEN	3SU1001-6AA40-0AA0	3SU1001-6AA40-0AA0	Siemens	EIFC050005
6	HOLDER	3SU1500-0AA10-0AA0	3SU1500-0AA10-0AA0	Siemens	EICH000022
2	Electromechanical relays, Industrial plug-in relays, MY	MY4IN DC24(S)	MY4IN DC24(S)	Omron	EIDF632003
2	Electromechanical relays, Industrial plug-in relays, MY	PYF14A-E	PYF14A-E	Omron	E0024800
2	CONTACTOR,AC3:4KW 1NO DC24V	3RT2016-1BB41	3RT2016-1BB41	Siemens	EIDB032001
1	CONTACTOR,AC3:4KW 1NC DC24V	3RT2016-1BB42	3RT2016-1BB42	Siemens	EIDB032003
1	Potentiometer, 100k, front mount	100K	Part of MR5FC	MP Elettronica	EILK110000
1	Potentiometer, 10k, front mount	M22-R10K	229491	Eaton	EILK510K00
1	Main switch, 3 pole + N, 25 A, STOP function	P1-25/EA/SVB-SW/N	083960	Eaton	EICB154600
1	SELECTOR SWITCH, I-O-II, BLACK	3SU1002-2BL10-0AA0	3SU1002-2BL10-0AA0	Siemens	EICF000002
4	CONTACT MODULE 1NO	3SU1400-1AA10-1BA0	3SU1400-1AA10-1BA0	Siemens	EICG032200
3	CONTACT MODULE 1NC	3SU1400-1AA10-1CA0	3SU1400-1AA10-1CA0	Siemens	EICG032100
1	PUSHBUTTON, RED	3SU1000-0AB20-0AA0	3SU1000-0AB20-0AA0	Siemens	EICH000020
1	PUSHBUTTON, GREEN	3SU1000-0AB40-0AA0	3SU1000-0AB40-0AA0	Siemens	EICH000019
1	EM. STOP MUSHROOM PUSHBUTTON, 30MM, RED	3SU1000-1GB20-0AA0	3SU1000-1GB20-0AA0	Siemens	EICH000017
1	EMERGENCY STOP BACKING PLATE, YELLOW	3SU1900-0BC31-0NB0	3SU1900-0BC31-0NB0	Siemens	EICH000021
1	PUSHBUTTON, BLUE	3SU1000-0AB50-0AA0	3SU1000-0AB50-0AA0	Siemens	EICH000018
1	LOGO!POWER	6EP3331-6SB00-0AY0	6EP3331-6SB00-0AY0	Siemens	EIPF240105
1	Static Frequency Converter 0.37kW	ODE-3-120023-1F12	ODE-3-120023-1F12	Invertek	EIQBK37003
1	Wall mounted, 500x500x210	ELD.MAS0505021R5	MAS0505021R5	Eldon Group	EI1D366600
2	Screwed cable gland (electr.) M25, Grey	ESKV 25	10066413	Wiska	EIYP090025

Bill of material

Quantity	Description	Type number	Part Number	Supplier	Isah Number
1	Screwed cable gland (electr.) M16, Grey	ESKV 16	10066411	Wiska	EIYP090016
5	Screwed cable gland (electr.) M20, Grey	ESKV 20	10066412	Wiska	EIYP090020
8	End Clamb	CLIPFIX 35	3022218	Phoenix Contact	EI0M100002
8	End cover	D-UT 2,5/10	3047028	Phoenix Contact	EI0M040000
4	Feed-through terminal block	UT 10	3044160	Phoenix Contact	EI0J040002
1	Ground modular terminal block	UT 10-PE	3044173	Phoenix Contact	EI0J340001
38	Feed-through terminal block	UT 4	3044102	Phoenix Contact	EI0J020002
7	Ground modular terminal block	UT 4-PE	3044128	Phoenix Contact	EI0J320000

Components list

Device tag	Quantity	Description	Type number	Part number	Supplier	Isah number	Page/Path
-100S2	1	Main switch, 3 pole + N, 25 A, STOP function	P1-25/EA/SVB-SW/N	083960	Eaton	EICB154600	/100.2
-X0	2	End Clamb	CLIPFIX 35	3022218	Phoenix Contact	EI0M100002	/100.2;/100.3
-X0	1	End cover	D-UT 2,5/10	3047028	Phoenix Contact	EI0M040000	/100.2
-X0	4	Feed-through terminal block	UT 10	3044160	Phoenix Contact	EI0J040002	/100.2
-X0	1	Ground modular terminal block	UT 10-PE	3044173	Phoenix Contact	EI0J340001	/100.3
-110F2	1	CIRCUIT BREAKER 6KA 2POL C6	5SY6206-7	5SY6206-7	Siemens	E0025015	/110.2
-110F7	1	CIRCUIT BREAKER 6KA 2POL C10	5SY6210-7	5SY6210-7	Siemens	EIHD042006	/110.7
-110T1	1	LOGO!POWER	6EP3331-6SB00-0AY0	6EP3331-6SB00-0AY0	Siemens	EIPF240105	/110.1
-150A0	1	CONTROL CIRCUIT FOR INVICON TT036 AND TT038	CV6FS	PV CV6FS A2 STD	MP Elettronica	EIUG000001	/150.0
-150R6	1	Potentiometer, 100k, front mount	100K	Part of MR5FC	MP Elettronica	EILK110000	/150.6
-X1	12	Feed-through terminal block	UT 4	3044102	Phoenix Contact	EI0J020002	/150.1.../150.3;/155.2;/160.2
-X1	5	End cover	D-UT 2,5/10	3047028	Phoenix Contact	EI0M040000	/150.1.../150.3;/155.2;/160.2
-X1	6	Ground modular terminal block	UT 4-PE	3044128	Phoenix Contact	EI0J320000	/150.1;/150.2;/150.4;/155.2;/155.3;/160.2
-X5	2	End Clamb	CLIPFIX 35	3022218	Phoenix Contact	EI0M100002	/150.4;/150.6
-X5	1	End cover	D-UT 2,5/10	3047028	Phoenix Contact	EI0M040000	/150.4
-X5	3	Feed-through terminal block	UT 4	3044102	Phoenix Contact	EI0J020002	/150.5
-X5	1	Ground modular terminal block	UT 4-PE	3044128	Phoenix Contact	EI0J320000	/150.6
-155U2	1	Static Frequency Converter 0.37kW	ODE-3-120023-1F12	ODE-3-120023-1F12	Invertek	EIQBK37003	/155.2
-X1	2	End Clamb	CLIPFIX 35	3022218	Phoenix Contact	EI0M100002	/155.2;/160.2
-X4	23	Feed-through terminal block	UT 4	3044102	Phoenix Contact	EI0J020002	/155.3;/155.4;/200.7;/220.2;/220.4;/230.1.../23
-156R3	1	Potentiometer, 10k, front mount	M22-R10K	229491	Eaton	EILK510K00	/156.3
-160F2	1	CIRCUIT-BREAKER SCREW CONNECTION 6.3A	3RV2011-1GA10	3RV2011-1GA10	Siemens	E0029956	/160.2
-160F2	1	TRANSVERSE AUX. SWITCH, 1NO+1NC, SCREW CONNECTION,	3RV2901-1E	3RV29011E	Siemens	E0025012	/160.2
-200P3	1	LED MODULE, GREEN	3SU1401-1BB40-1AA0	3SU1401-1BB40-1AA0	Siemens	EIFD403002	/200.3
-200P3	1	INDICATOR LIGHT, GREEN	3SU1001-6AA40-0AA0	3SU1001-6AA40-0AA0	Siemens	EIFC050005	/200.3
-200P3	1	HOLDER	3SU1500-0AA10-0AA0	3SU1500-0AA10-0AA0	Siemens	EICH000022	/200.3
-200Q1	1	Electromechanical relays, Industrial plug-in relays, MY	MY4IN DC24(S)	MY4IN DC24(S)	Omron	EIDF632003	/200.1
-200Q1	1	Electromechanical relays, Industrial plug-in relays, MY	PYF14A-E	PYF14A-E	Omron	E0024800	/200.1
-200Q5	1	Electromechanical relays, Industrial plug-in relays, MY	MY4IN DC24(S)	MY4IN DC24(S)	Omron	EIDF632003	/200.5
-200Q5	1	Electromechanical relays, Industrial plug-in relays, MY	PYF14A-E	PYF14A-E	Omron	E0024800	/200.5
-200Q7	1	CONTACTOR,AC3:4KW 1NO DC24V	3RT2016-1BB41	3RT2016-1BB41	Siemens	EIDB032001	/200.7
-200S1	1	SELECTOR SWITCH, I-O-II, BLACK	3SU1002-2BL10-0AA0	3SU1002-2BL10-0AA0	Siemens	EICF000002	/200.1
-200S1	2	CONTACT MODULE 1NO	3SU1400-1AA10-1BA0	3SU1400-1AA10-1BA0	Siemens	EICG032200	/200.1
-200S1	1	HOLDER	3SU1500-0AA10-0AA0	3SU1500-0AA10-0AA0	Siemens	EICH000022	/200.1
-200S1.1	1	CONTACT MODULE 1NC	3SU1400-1AA10-1CA0	3SU1400-1AA10-1CA0	Siemens	EICG032100	/200.1
-200S1.1	1	PUSHBUTTON, RED	3SU1000-0AB20-0AA0	3SU1000-0AB20-0AA0	Siemens	EICH000020	/200.1
-200S1.1	1	HOLDER	3SU1500-0AA10-0AA0	3SU1500-0AA10-0AA0	Siemens	EICH000022	/200.1
-200S1.2	1	CONTACT MODULE 1NO	3SU1400-1AA10-1BA0	3SU1400-1AA10-1BA0	Siemens	EICG032200	/200.1
-200S1.2	1	PUSHBUTTON, GREEN	3SU1000-0AB40-0AA0	3SU1000-0AB40-0AA0	Siemens	EICH000019	/200.1
-200S1.2	1	HOLDER	3SU1500-0AA10-0AA0	3SU1500-0AA10-0AA0	Siemens	EICH000022	/200.1
-X4	2	End Clamb	CLIPFIX 35	3022218	Phoenix Contact	EI0M100002	/200.7;/230.8
-X4	1	End cover	D-UT 2,5/10	3047028	Phoenix Contact	EI0M040000	/200.7
-220K1	1	SIRIUS SAFETY RELAY STD RELAYS 3NO+1NC	3SK1111-1AB30	3SK1111-1AB30	Siemens	E0029943	/220.1
-220Q4	1	CONTACTOR,AC3:4KW 1NC DC24V	3RT2016-1BB42	3RT2016-1BB42	Siemens	EIDB032003	/220.4
-220S2	2	CONTACT MODULE 1NC	3SU1400-1AA10-1CA0	3SU1400-1AA10-1CA0	Siemens	EICG032100	/220.2
-220S2	1	EM. STOP MUSHROOM PUSHBUTTON, 30MM, RED	3SU1000-1GB20-0AA0	3SU1000-1GB20-0AA0	Siemens	EICH000017	/220.2
-220S2	1	EMERGENCY STOP BACKING PLATE, YELLOW	3SU1900-0BC31-0NB0	3SU1900-0BC31-0NB0	Siemens	EICH000021	/220.2
-220S2	1	HOLDER	3SU1500-0AA10-0AA0	3SU1500-0AA10-0AA0	Siemens	EICH000022	/220.2
-220S7	1	CONTACT MODULE 1NO	3SU1400-1AA10-1BA0	3SU1400-1AA10-1BA0	Siemens	EICG032200	/220.7
-220S7	1	PUSHBUTTON, BLUE	3SU1000-0AB50-0AA0	3SU1000-0AB50-0AA0	Siemens	EICH000018	/220.7
-220S7	1	HOLDER	3SU1500-0AA10-0AA0	3SU1500-0AA10-0AA0	Siemens	EICH000022	/220.7
-240Q2	1	CONTACTOR,AC3:4KW 1NO DC24V	3RT2016-1BB41	3RT2016-1BB41	Siemens	EIDB032001	/240.2
-800U1	1	Wall mounted, 500x500x210	ELD.MAS0505021R5	MAS0505021R5	Eldon Group	EI1D366600	/800.1
-800U1	2	Screwed cable gland (electr.) M25, Grey	ESKV 25	10066413	Wiska	EIYP090025	/800.5;/800.6
-800U1	1	Screwed cable gland (electr.) M16, Grey	ESKV 16	10066411	Wiska	EIYP090016	/800.6
-800U1	5	Screwed cable gland (electr.) M20, Grey	ESKV 20	10066412	Wiska	EIYP090020	/800.5;/800.6

Terminal line-up diagram

F12_001

Part number					
Mounting rail			Strip label	End angle rear	End plate
				PXC.3022218	PXC.3047028

Terminal					
Part number	Type number	Cross-section	Terminal label	Jumper	Cover
PXC.3022218	CLIPFIX 35				
PXC.3047028	D-UT 2,5/10				
PXC.3044160	UT 10	16			
PXC.3044160	UT 10	16			
PXC.3044160	UT 10	16			
PXC.3044160	UT 10	16			
PXC.3044173	UT 10-PE	16			
PXC.3022218	CLIPFIX 35				

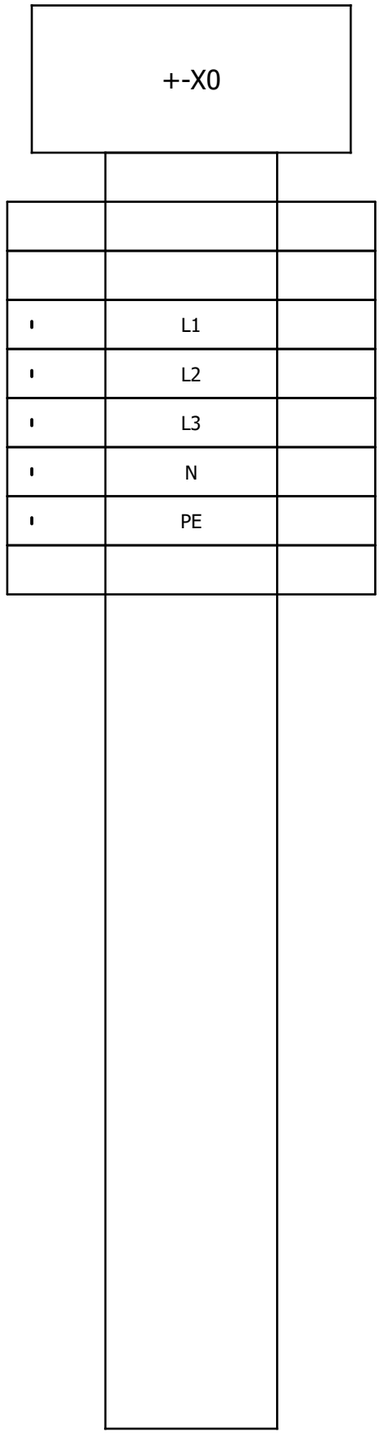

920

941

			Date	13-9-2022	Control box project Number xxxxx	Goudsmit Magnetic Systems GOUDSMIT MAGNETICS	RHPS-E-CB-NA-LC-HW-FD1 E0122431
			Ed.	mv			
			Appr.				
Modification	Date	Name	Original		Replacement of	Replaced by	

Terminal Plan

=

+

Page 940

Page 19 / 24

Terminal line-up diagram

F12_001

Part number					
Mounting rail			Strip label	End angle rear	End plate
				PXC.3022218	

Terminal					
Part number	Type number	Cross-section	Terminal label	Jumper	Cover
PXC.3022218	CLIPFIX 35				
PXC.3044102	UT 4	6			
PXC.3044102	UT 4	6			
PXC.3044102	UT 4	6			
PXC.3047028	D-UT 2,5/10				
PXC.3044128	UT 4-PE	6			
PXC.3044128	UT 4-PE	6			
PXC.3044102	UT 4	6			
PXC.3044102	UT 4	6			
PXC.3047028	D-UT 2,5/10				
PXC.3044128	UT 4-PE	6			
PXC.3044102	UT 4	6			
PXC.3044102	UT 4	6			
PXC.3047028	D-UT 2,5/10				
PXC.3044128	UT 4-PE	6			
PXC.3044102	UT 4	6			
PXC.3044102	UT 4	6			
PXC.3047028	D-UT 2,5/10				
PXC.3044128	UT 4-PE	6			
PXC.3044102	UT 4	6			
PXC.3044102	UT 4	6			
PXC.3047028	D-UT 2,5/10				
PXC.3044128	UT 4-PE	6			
PXC.3022218	CLIPFIX 35				

+-X1

'	U1	
'	V1	
'	W1	
'	PE	
'	AS	
'	U2	
'	V2	
'	PE	
'	U3	
'	V3	
'	PE	
'	U4	
'	V4	
'	PE	
'	U5	
'	V5	
'	W5	
'	PE	

			Date	13-9-2022	Control box project Number xxxxx		Goudsmit Magnetic Systems	RHPS-E-CB-NA-LC-HW-FD1 E0122431	Terminal Plan	=
			Ed.	mv			GOUDSMIT MAGNETICS			+
			Appr.							Page 941
Modification	Date	Name	Original		Replacement of	Replaced by				Page 20 / 24

Terminal line-up diagram

F12_001

Part number					
Mounting rail			Strip label	End angle rear	End plate
				PXC.3022218	PXC.3047028

Terminal					
Part number	Type number	Cross-section	Terminal label	Jumper	Cover
PXC.3022218	CLIPFIX 35				
PXC.3047028	D-UT 2,5/10				
PXC.3044102	UT 4	6			
PXC.3044102	UT 4	6			
PXC.3044102	UT 4	6			
PXC.3044102	UT 4	6			
PXC.3044102	UT 4	6			
PXC.3044102	UT 4	6			
PXC.3044102	UT 4	6			
PXC.3044102	UT 4	6			
PXC.3044102	UT 4	6			
PXC.3044102	UT 4	6			
PXC.3044102	UT 4	6			
PXC.3044102	UT 4	6			
PXC.3044102	UT 4	6			
PXC.3044102	UT 4	6			
PXC.3044102	UT 4	6			
PXC.3044102	UT 4	6			
PXC.3044102	UT 4	6			
PXC.3044102	UT 4	6			
PXC.3044102	UT 4	6			
PXC.3044102	UT 4	6			
PXC.3044102	UT 4	6			

+-X4		
'	1	
'	2	
'	3	
'	4	
'	5	
'	6	
'	7	
'	8	
'	9	
'	10	
'	11	
'	12	
'	13	
'	14	
'	15	
'	16	
'	17	
'	18	
'	19	
'	20	
'	21	
'	22	
'	23	

Terminal line-up diagram

F12_001

Part number					
Mounting rail			Strip label	End angle rear	End plate
				PXC.3022218	PXC.3047028

Terminal					
Part number	Type number	Cross-section	Terminal label	Jumper	Cover
PXC.3022218	CLIPFIX 35				

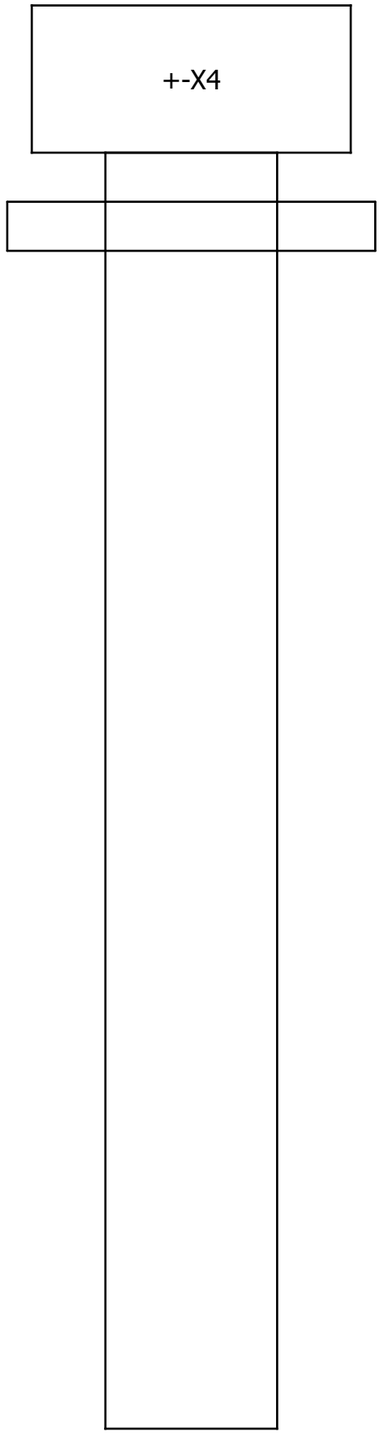

Terminal line-up diagram

F12_001

Part number					
Mounting rail			Strip label	End angle rear	End plate
				PXC.3022218	PXC.3047028

Terminal					
Part number	Type number	Cross-section	Terminal label	Jumper	Cover
PXC.3022218	CLIPFIX 35				
PXC.3047028	D-UT 2,5/10				
PXC.3044102	UT 4	6			
PXC.3044102	UT 4	6			
PXC.3044102	UT 4	6			
PXC.3044128	UT 4-PE	6			
PXC.3022218	CLIPFIX 35				

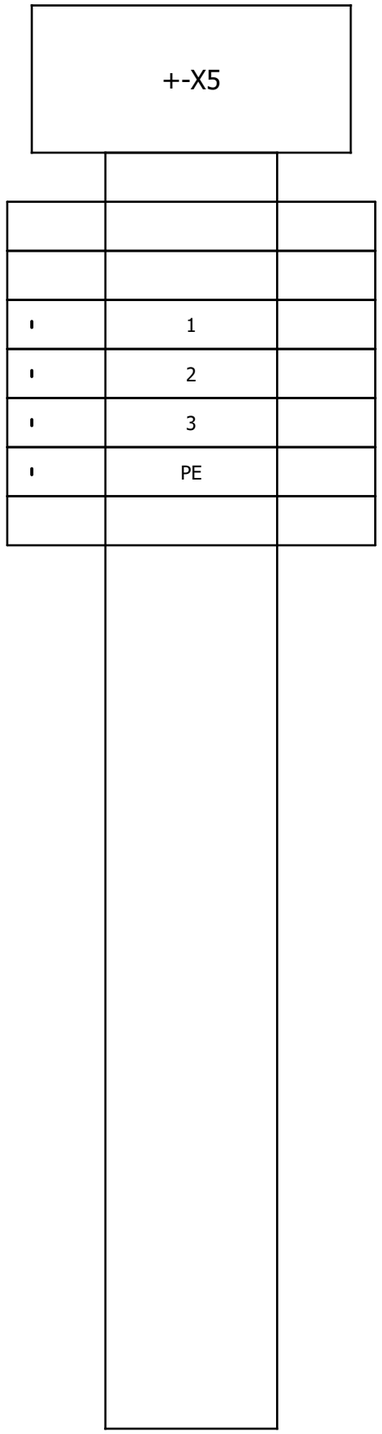

942.a

990

			Date	13-9-2022	Control box project Number xxxxx		Goudsmit Magnetic Systems	RHPS-E-CB-NA-LC-HW-FD1 E0122431	Terminal Plan	=
			Ed.	mv			GOUDSMIT MAGNETICS			+
			Appr.							Page 943
Modification	Date	Name	Original		Replacement of	Replaced by				Page 23 / 24

Textplates

RESOPALS

MAINSWITCH	BELT SPEED
FEEDER SPEED	POWER ON
POWER OFF	LOCAL/REMOTE
RESET EMERGENCY STOP	EMERGENCY STOP
BELT/FEEDER ON	-

TEXTPLATE

GOUDSMIT MAGNETICS

www.goudsmitmagnets.com

CONTROL BOX	**E0122431**
VOLTAGE:	400 VAC
CURRENT:	16 A
POWER:	4.7 kW

Goudsmit Magnetics, Petunialaan 19, 5582 HA, Waalre, The Netherlands
UK authorised prepresentative:
Goudsmit UK Ltd, 1st Floor, Riverview, The Green, Tullynacross Rd, Lisburn, BT27 5SR, United Kingdom

RESOPAL PROPERTIES	
Resopal dimension	45x15mm
Resopal color	White
Text color	Black