DOC.NR.	REV	DATE	BY	DESCRIPTION
E0128627	-	24-3-2020	JVe	ORIGINAL DRAWING
E0128627	A	2-11-2020	JVe	DIMENSIONS ADDED

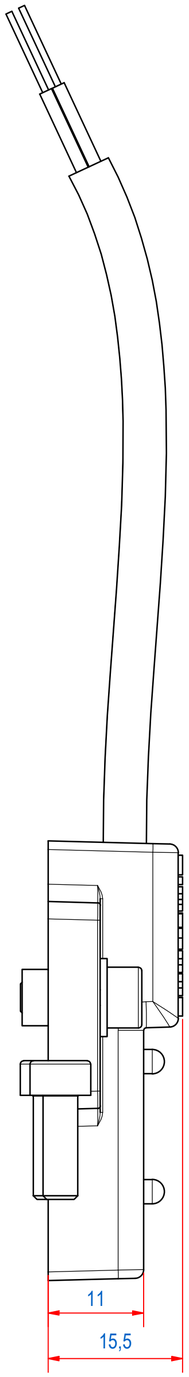

CABLE LENGTH = 2,5 m, OPEN END
NR. OF WIRES = 4x0,25 BN-WHT-BK-BU

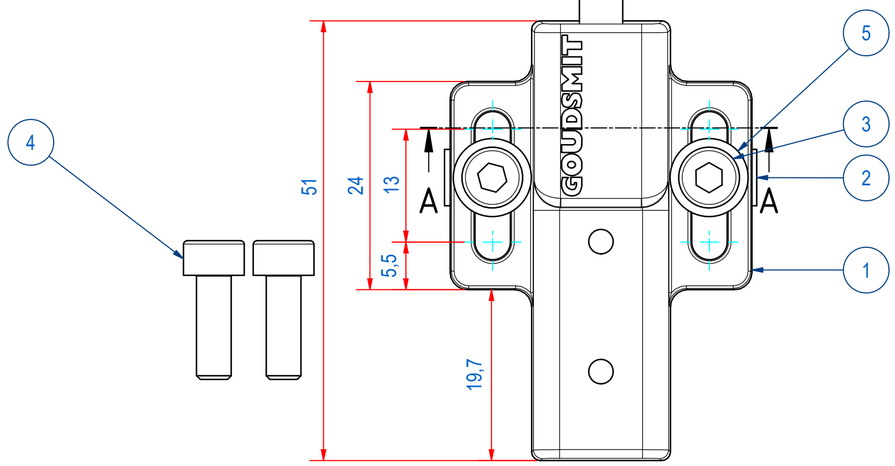

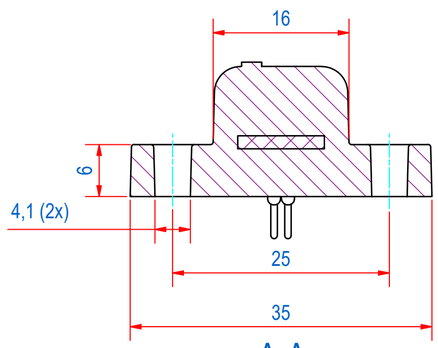

A-A

CONNECTING SCHEME
SENSOR

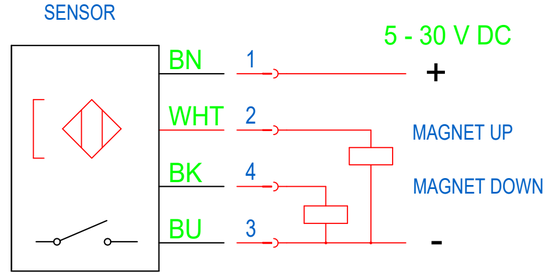

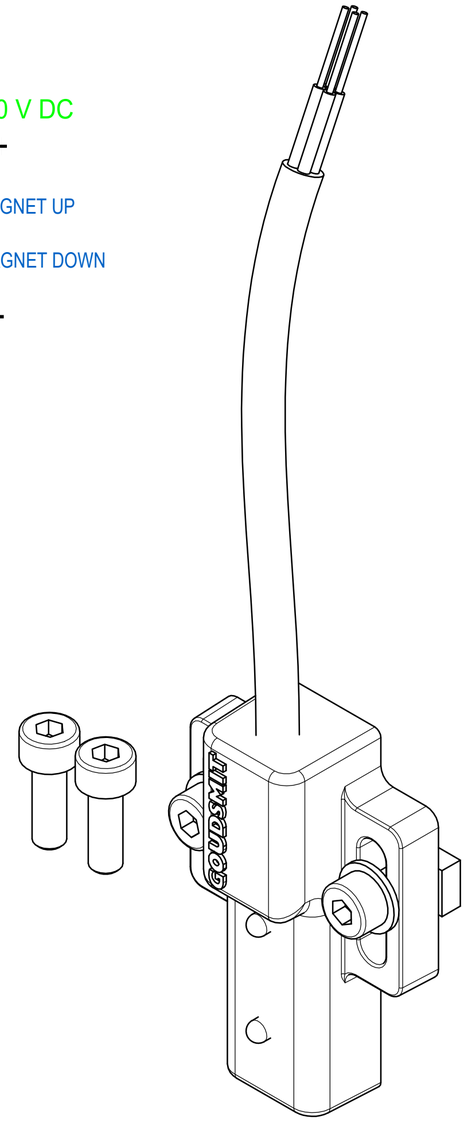

ITEM	QTY	PART NUMBER	DESCRIPTION	Dimensions	
6	1	E0131735	GRIPPER SENSOR LEAFLET		
5	2	70.0200004	WASHER M4- A2	M4	
4	2	51.0204012	SCREW, HEX SH M4 x 12 - A2	M4 x 12	
3	2	51.0304010	SCREW, HEX SH M4x10-A4	M4 x 10	
2	1	E0122721	GRIPPER ON/OFF SENSOR MOUNTING STRIP		
1	1	E0110186	MAGNETIC GRIPPER ON/OFF SENSOR		
RAW MAT.	1				
	Quantity	Material Number	Material Description	Length (mm)	Width (mm)

Sheet: A2	Extra info:		General tolerance: ISO 2768- mK
Drawn: JVe	Weight (kg): 0.029		Drawn according: ISO268; ISO1101; ISO2553
Date: 10-2-2020		GOUDSMIT MAGNETICS	Status: Standard
Spare part: False	Source: MC-C		Customer reference number:
Quick search: GRIPPER ON/OFF			Document number: E0128627 / Doc.Rev: A
Description: SENSOR HGR-SPARE-GRIPPER ON/OFF SENSOR ASSY			Part number: E0128627 / Rev: A

® All rights reserved. Reproduction is not permitted without written permission of GOUDSMIT Magnetic Systems BV