Goudsmit Magnetic Systems
Petunialaan 19
5582 HA Waalre
The Netherlands
Phone +31 (0)40 - 2213283

Customer Name:	Customer Name xxxxx
Customer Number:	Customer Number XXXXXX
Country:	The Netherlands
Language:	English

Project Name:	Control box EM1-3 INCL. VALVE
Project Number:	project Number xxxxx
Product Description:	SPA-E-CB-NA-PLC-HW-PT1K0
Product Number:	ESBP210001
Make:	TNR

Designer:	mv	Supply Voltage:	110-230-400 VAC
Design Date:	12-6-2023	Nominal Power:	1.0 kW
Edit Date:	21-6-2023	Max Supply Current:	16 A
Revision Number:	Rev F	Control Voltage:	24V DC
Revision Status:		ATEX:	No Atex

Number of pages 31

Project overview

PAGE NUMBERING	
1	Title page
2	Project Overview
3	Revision overview
4	Page overview
100	Mains supply
110	Power supplies
150	Main circuit
200	Control Circuit
300	-
400	PLC overview
500	PLC I/O
600	-
700	-
800	Cabinet Layout
900	Bill of material
920	Components list
940	Terminal Plan
990	Textplates

TERMINAL NUMBERING	
X0	Mains supply
X1	Main power
X2	Control Voltage 230VAC
X3	Control Voltage 24 VAC
X4	Control Voltage 24 VDC
X5	Analog Signals (Field)
X6	Digital Signals (Field)
X7	External Signals (Customer)
X8	EEX i
X9	-

100M1

REFERENCE NUMBER
PART CODE
PAGE NUMBER

COLOR CODE INTERNAL WIRING		
Main voltage 400/230VAC	Phase	Black
	Neutral	Lightblue
	Earth	Yellow/Green
Control voltage 230VAC	Phase	Red
	Switch wire	Red
	Neutral	Red
Control voltage 24VAC	Phase (L)	Grey
	Switch wire	Grey
	Neutral (N)	Grey
Control voltage 24VDC	Phase (+)	Darkblue
	Switch wire	Darkblue
	Neutral (-)	Darkblue
Control voltage 12VDC	Phase (+)	White
	Switch wire	White
	Neutral (-)	White
Measurement		Purple
External signals (potential free contacts)		Orange
EEx i		Blue

Revision Overview

Revision Number	Revision Comment	Engineer	Last Revision Date
F	Schematic converted to ePlan. Extra input for product channel open detection sensor.	mv	12-06-2023

Table of contents

Column X: An automatically generated page was edited

Page	Page description	Revision	Date	Edited by	X
/1	Title Page		12-8-2022	mv	
/2	Project Overview		10-8-2022	mv	
/3	Revision Overview		12-6-2023	mv	
/4	Page Overview		21-6-2023	mv	
/100	Mains Power		8-6-2023	mv	
/110	Power Supplies		21-6-2023	mv	
/111	Power Supplies		8-6-2023	mv	
/150	Main Circuit		8-6-2023	mv	
/200	Control Circuit 24VDC		8-6-2023	mv	
/220	Control Circuit Temperature		8-6-2023	mv	
/230	Control Circuit Status		7-6-2023	mv	
/400	PLC overview		12-6-2023	mv	
/410	PLC CPU Power		5-6-2023	mv	
/412	PLC Digital Mix Power		7-6-2023	mv	
/413	PLC Digital Mix Power		7-6-2023	mv	
/501	PLC I/O Digital Inputs		8-6-2023	mv	
/502	PLC I/O Digital Outputs		21-6-2023	mv	
/503	PLC I/O Digital Inputs		7-6-2023	mv	
/504	PLC I/O Digital Outputs		7-6-2023	mv	
/800	Cabinet Layout		12-6-2023	mv	
/900	Bill of material		12-6-2023	mv	
/901	Bill of material		12-6-2023	mv	
/920	Components List		12-6-2023	mv	
/921	Components List		12-6-2023	mv	
/940	Terminal Plan		7-6-2023	mv	
/941	Terminal Plan		7-6-2023	mv	
/942	Terminal Plan		7-6-2023	mv	
/943	Terminal Plan		7-6-2023	mv	
/943.a	Terminal Plan		7-6-2023	mv	
/944	Terminal Plan		21-6-2023	mv	
/990	Textplates		5-9-2022	mv	

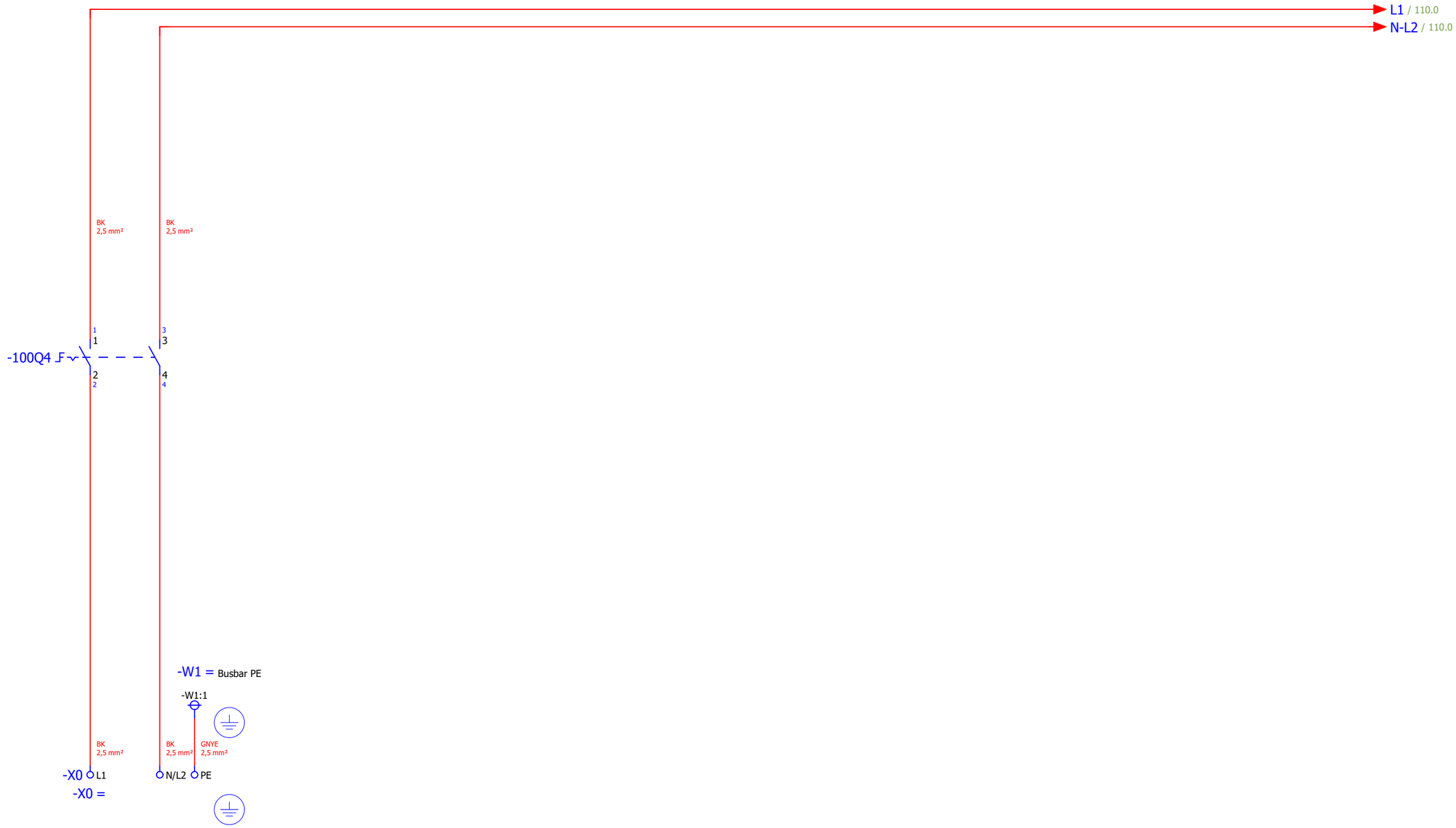

Main Power
110-230-400 VAC + PE / 50-60Hz
Fuse max. 16A

			Date	8-6-2023	Control box EM1-3 INCL. VALVE project Number xxxxx	Goudsmit Magnetic Systems	SPA-E-CB-NA-PLC-HW-PT1K0 ESBP210001	Mains Power	=	
			Ed.	mv					+	
			Appr.							Page 100
Modification	Date	Name	Original		Replacement of	Replaced by				Page 5 / 31

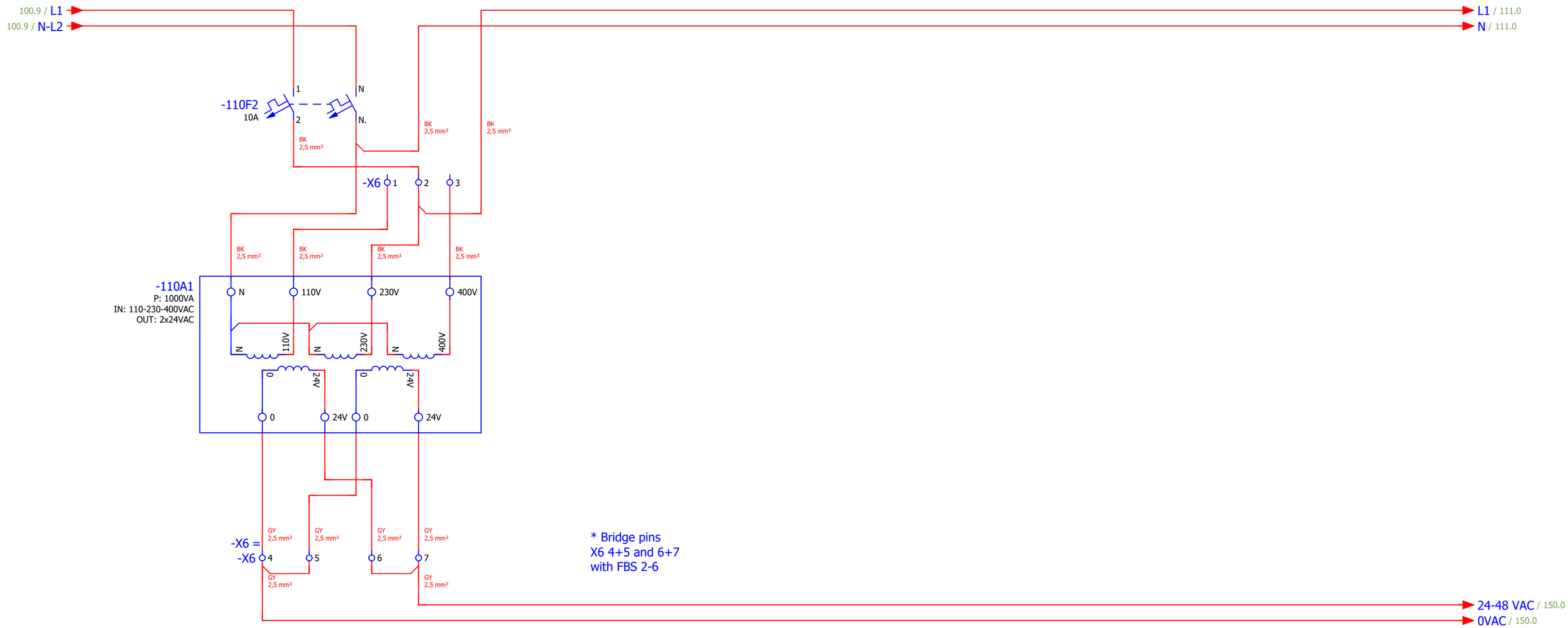

Power Supply 24V AC
Control Circuit

X6:1 FOR MAIN POWER SUPPLY 110V AC
X6:2 FOR MAIN POWER SUPPLY 230V AC
X6:3 FOR MAIN POWER SUPPLY 400V AC

			Date	21-6-2023	Control box EM1-3 INCL. VALVE project Number xxxxx	Goudsmit Magnetic Systems	SPA-E-CB-NA-PLC-HW-PT1K0 ESBP210001	Power Supplies	=
			Ed.	mv					+
			Appr.						Page 110
Modification	Date	Name	Original		Replacement of	Replaced by			Page 6 / 31

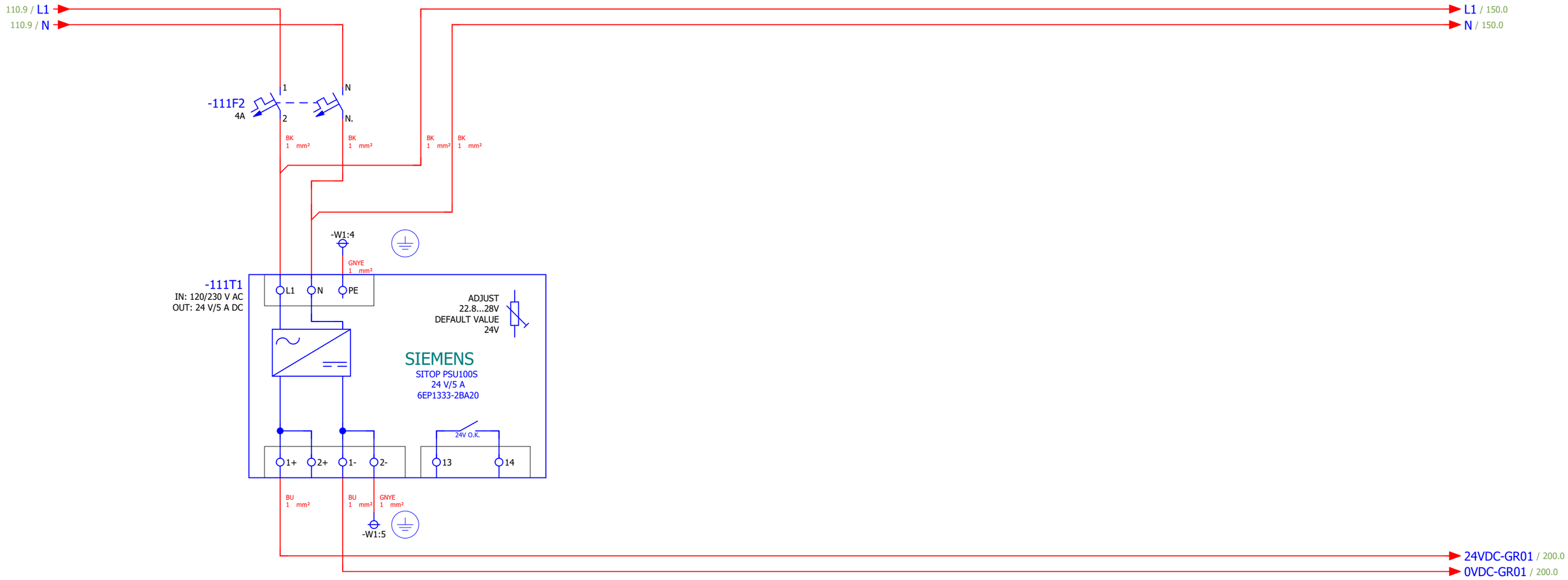

24V DC
Power Supply

110 150

			Date	8-6-2023	Control box EM1-3 INCL. VALVE project Number xxxxx	Goudsmit Magnetic Systems	SPA-E-CB-NA-PLC-HW-PT1K0 ESBP210001	Power Supplies	=
			Ed.	mv					+
			Appr.						Page 111
Modification	Date	Name	Original		Replacement of	Replaced by			Page 7 / 31

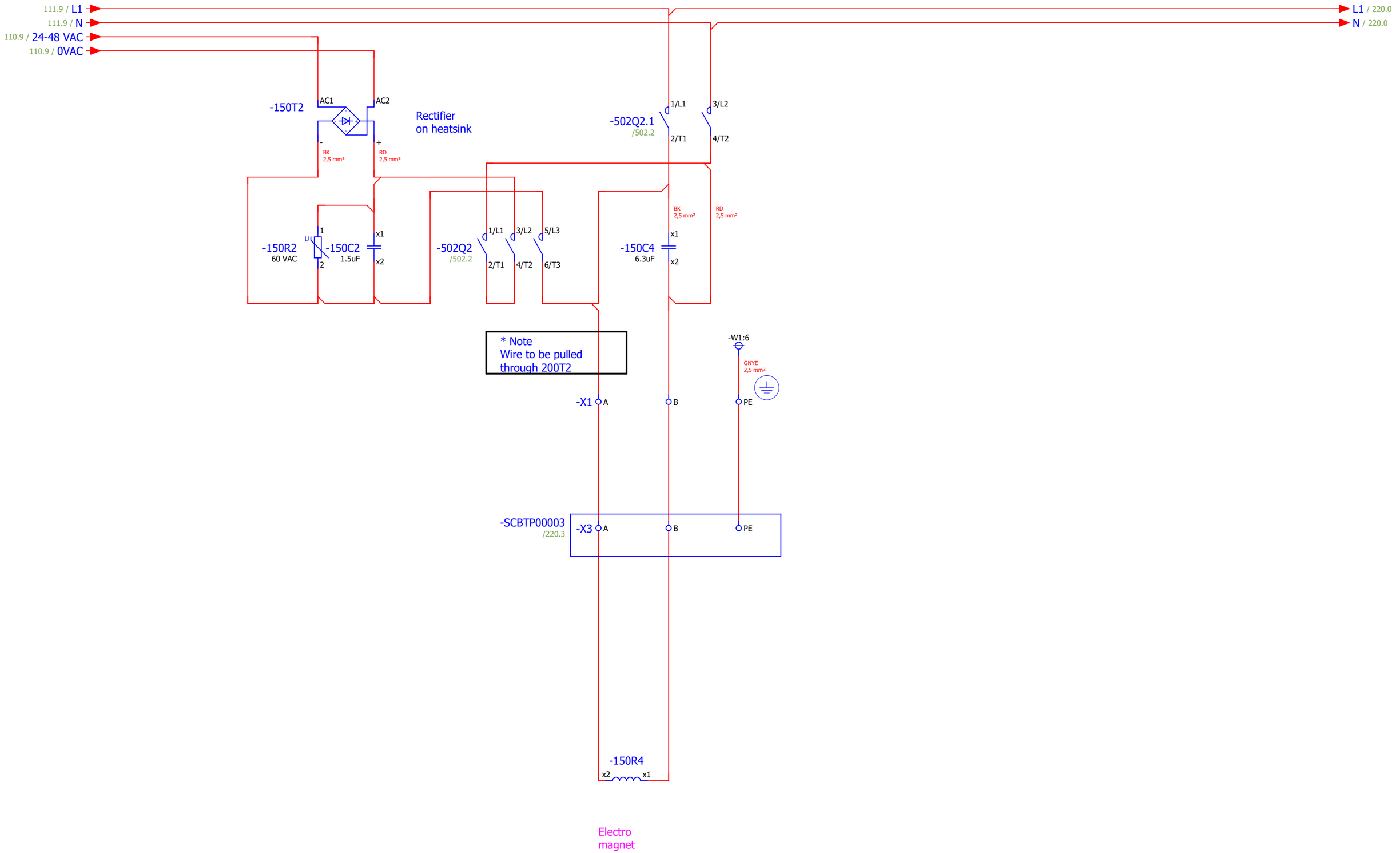

			Date	8-6-2023	Control box EM1-3 INCL. VALVE project Number xxxxx	Goudsmit Magnetic Systems GOUDSMIT MAGNETICS	SPA-E-CB-NA-PLC-HW-PT1K0 ESBP210001	Main Circuit	=
			Ed.	mv					+
			Appr.						Page 150
Modification	Date	Name	Original		Replacement of	Replaced by			Page 8 / 31

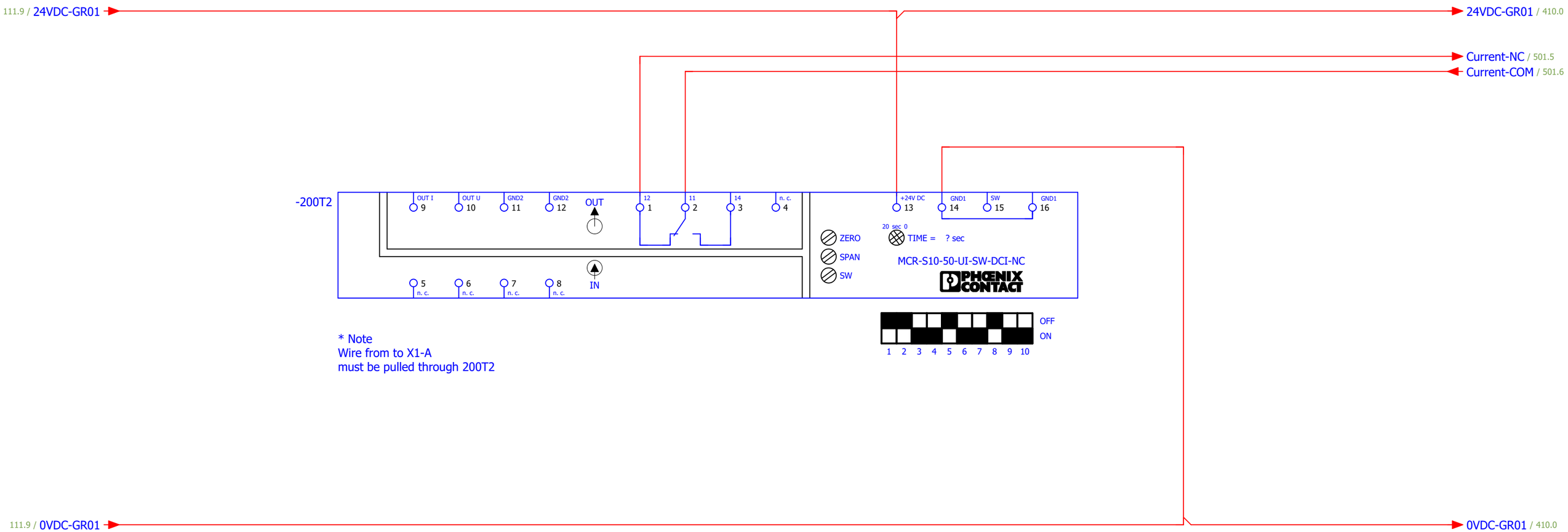

Current
Relay

150 220

			Date	8-6-2023	Control box EM1-3 INCL. VALVE project Number xxxxx	Goudsmit Magnetic Systems GOUDSMIT MAGNETICS	SPA-E-CB-NA-PLC-HW-PT1K0 ESBP210001	Control Circuit 24VDC	=
			Ed.	mv					+
			Appr.						Page 200
Modification	Date	Name	Original		Replacement of	Replaced by			Page 9 / 31

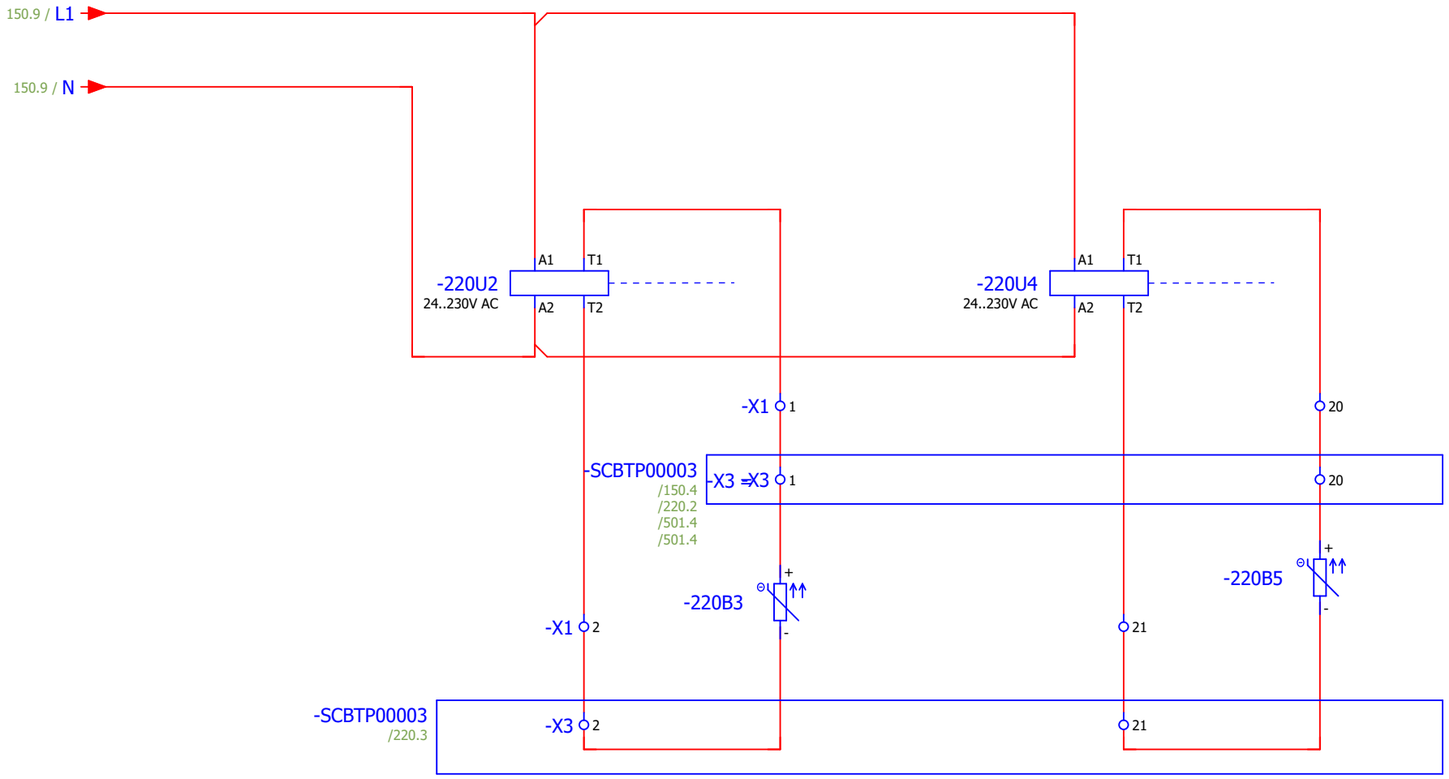

Temperature
Trip

08
06 05
98
96 95 /501.2

Temperature
Alarm

08
06 05
98
96 95 /501.6

200

230

			Date	8-6-2023	Control box EM1-3 INCL. VALVE project Number xxxxx	Goudsmit Magnetic Systems	SPA-E-CB-NA-PLC-HW-PT1K0 ESBP210001	Control Circuit Temperature	=
			Ed.	mv					+
			Appr.						Page 220
Modification	Date	Name	Original		Replacement of	Replaced by			Page 10 / 31

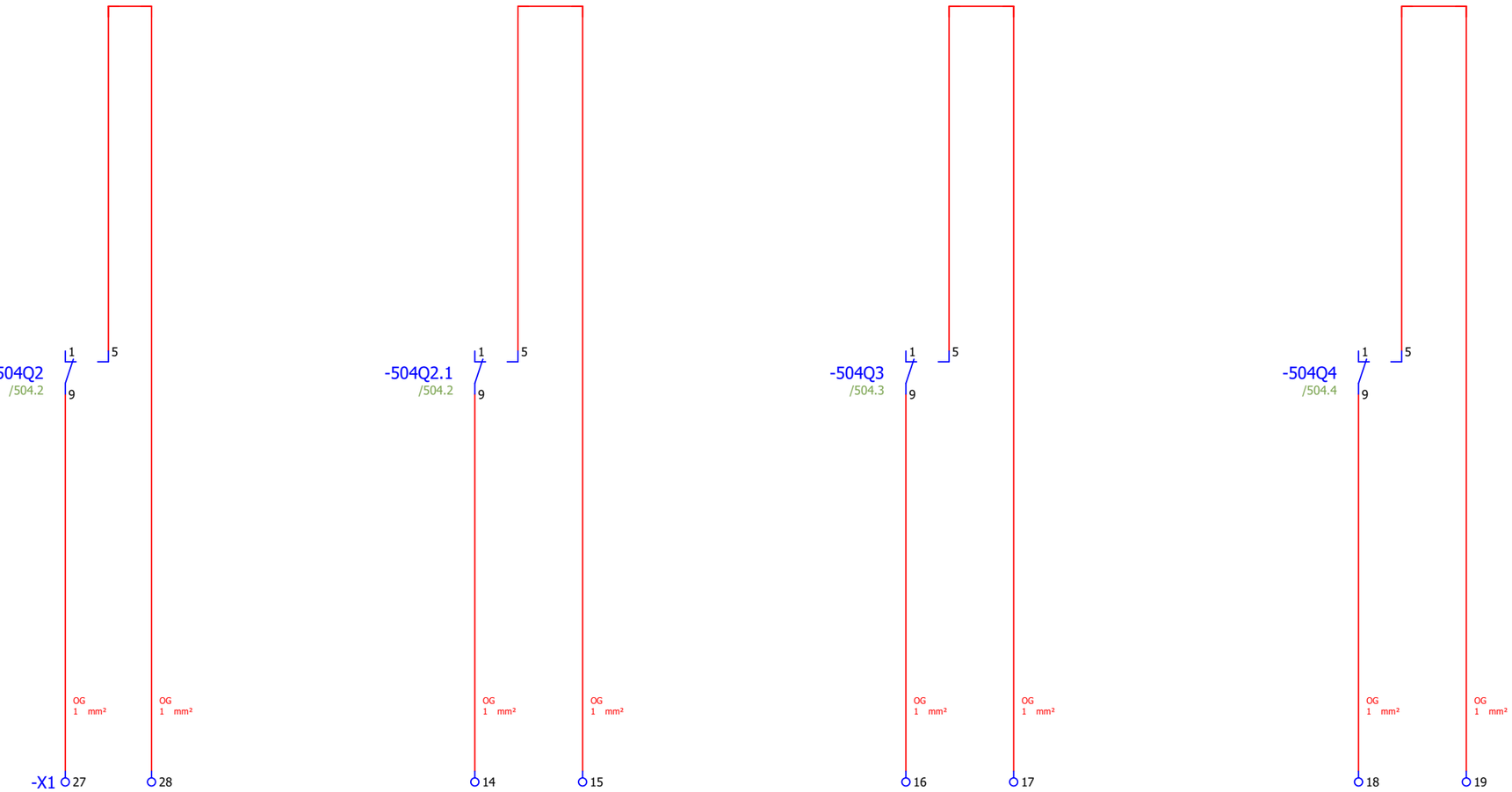

Product Channel Open
Product feed through

Magnet
On

Customizable
Alarm Output
1

Customizable
Alarm Output
2

			Date	7-6-2023	Control box EM1-3 INCL. VALVE project Number xxxxx	Goudsmit Magnetic Systems GOUDSMIT MAGNETICS	SPA-E-CB-NA-PLC-HW-PT1K0 ESBP210001	Control Circuit Status	=
			Ed.	mv					+
			Appr.						Page 230
Modification	Date	Name	Original		Replacement of	Replaced by			Page 11 / 31

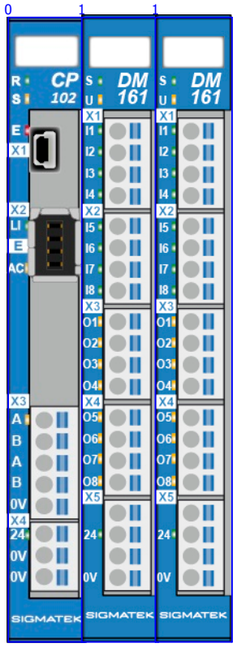

			Date	12-6-2023	Control box EM1-3 INCL. VALVE project Number xxxxx	Goudsmit Magnetic Systems GOUDSMIT MAGNETICS	SPA-E-CB-NA-PLC-HW-PT1K0 ESBP210001	PLC overview	=	
			Ed.	mv					+	
			Appr.							Page 400
Modification	Date	Name	Original		Replacement of	Replaced by				Page 12 / 31

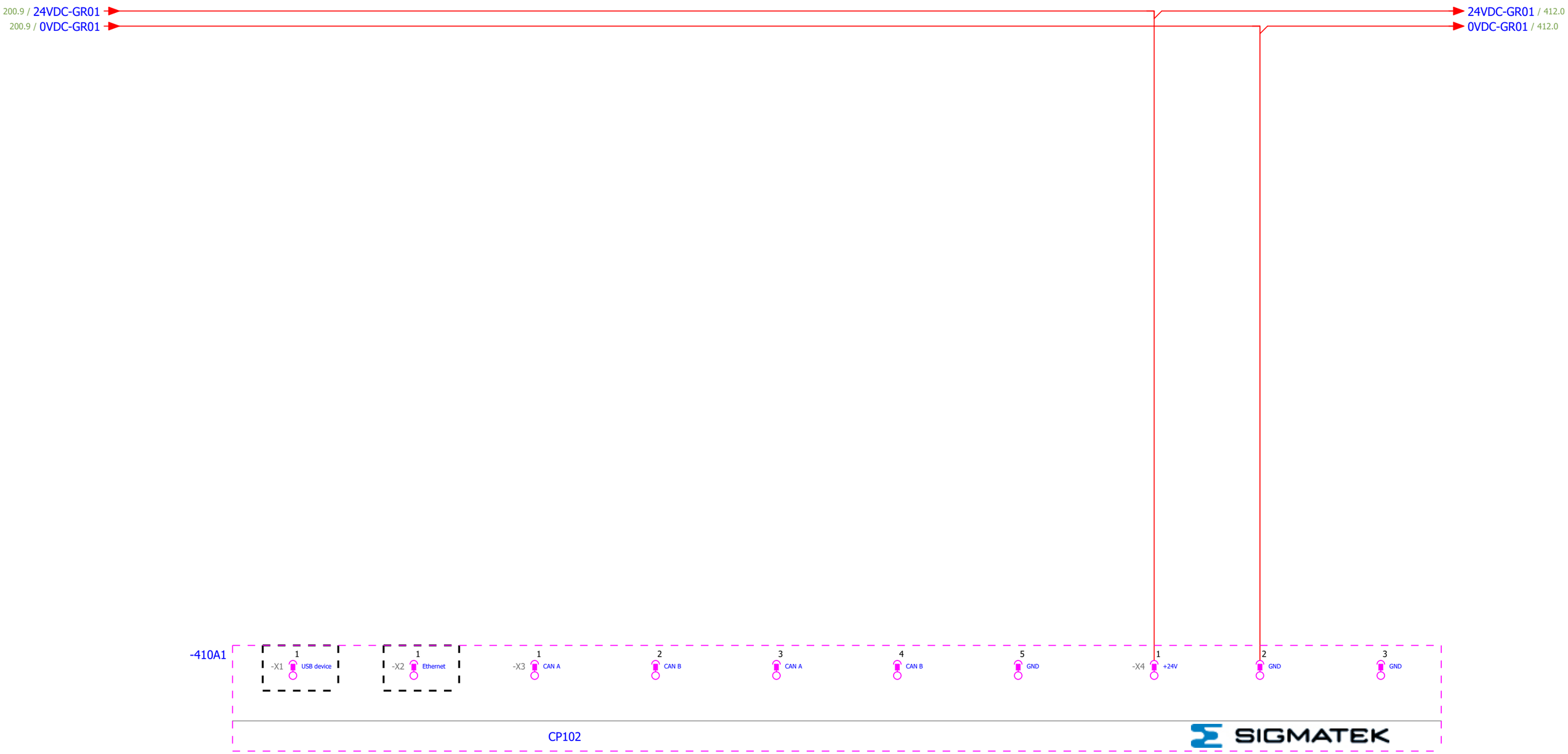

			Date	5-6-2023	Control box EM1-3 INCL. VALVE project Number xxxxx	Goudsmit Magnetic Systems GOUDSMIT MAGNETICS	SPA-E-CB-NA-PLC-HW-PT1K0 ESBP210001	PLC CPU Power	=
			Ed.	mv					+
			Appr.						Page 410
Modification	Date	Name	Original		Replacement of	Replaced by			Page 13 / 31

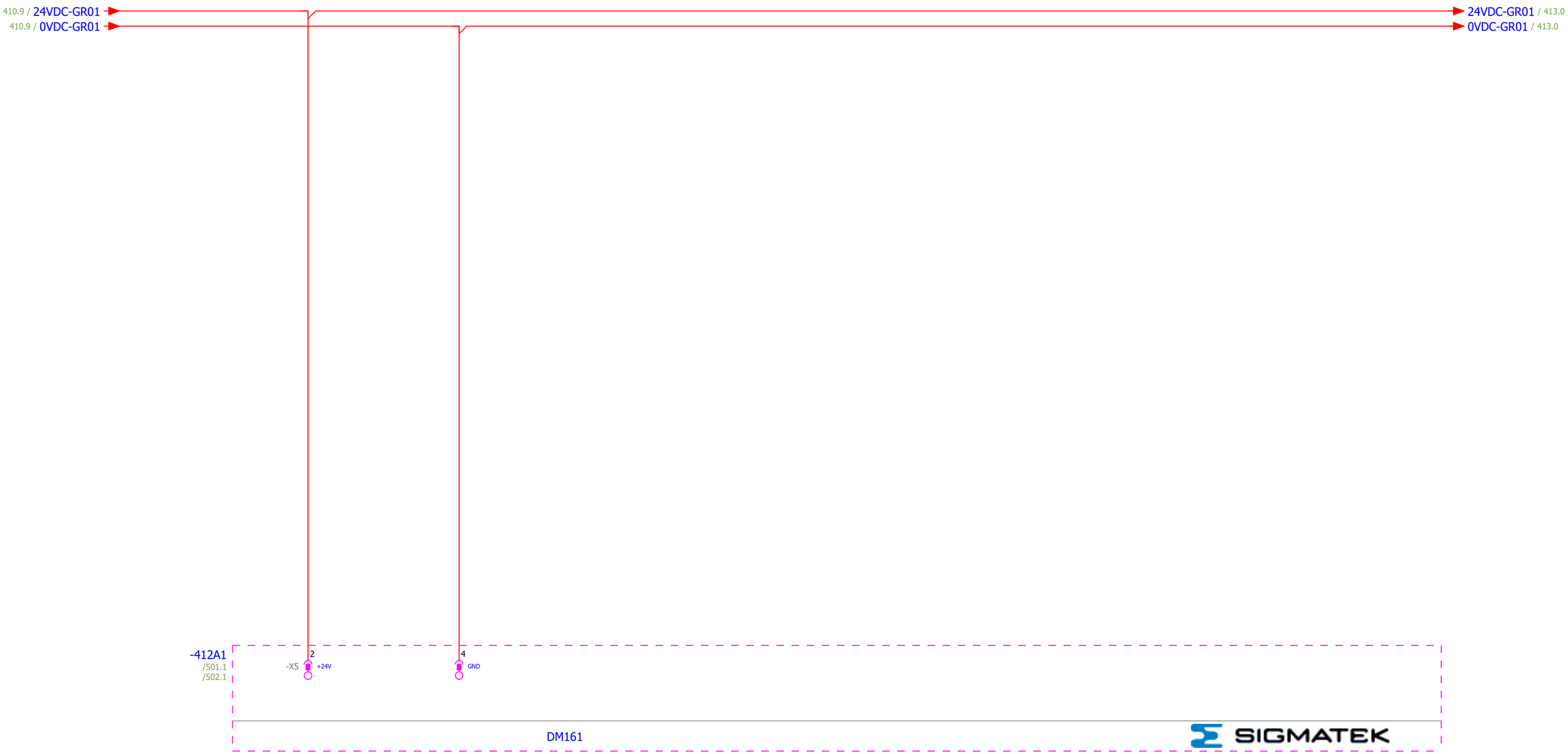

			Date	7-6-2023	Control box EM1-3 INCL. VALVE project Number xxxxx	Goudsmit Magnetic Systems GOUDSMIT MAGNETICS	SPA-E-CB-NA-PLC-HW-PT1K0 ESBP210001	PLC Digital Mix Power	=
			Ed.	mv					+
			Appr.						Page 412
Modification	Date	Name	Original		Replacement of	Replaced by			Page 14 / 31

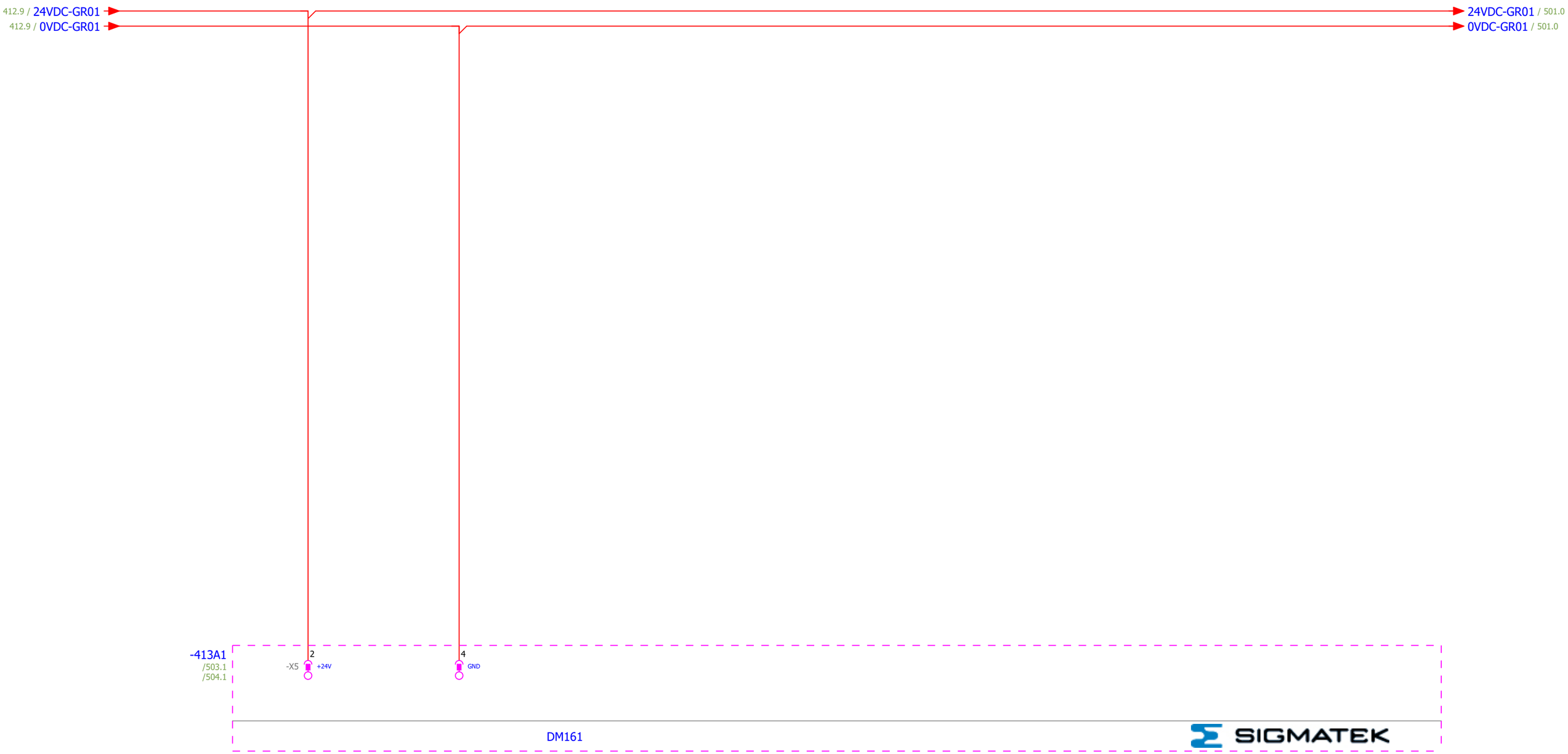

412

501

			Date	7-6-2023	Control box EM1-3 INCL. VALVE project Number xxxxx	Goudsmit Magnetic Systems GOUDSMIT MAGNETICS	SPA-E-CB-NA-PLC-HW-PT1K0 ESBP210001	PLC Digital Mix Power	=
			Ed.	mv					+
			Appr.						Page 413
Modification	Date	Name	Original		Replacement of	Replaced by			Page 15 / 31

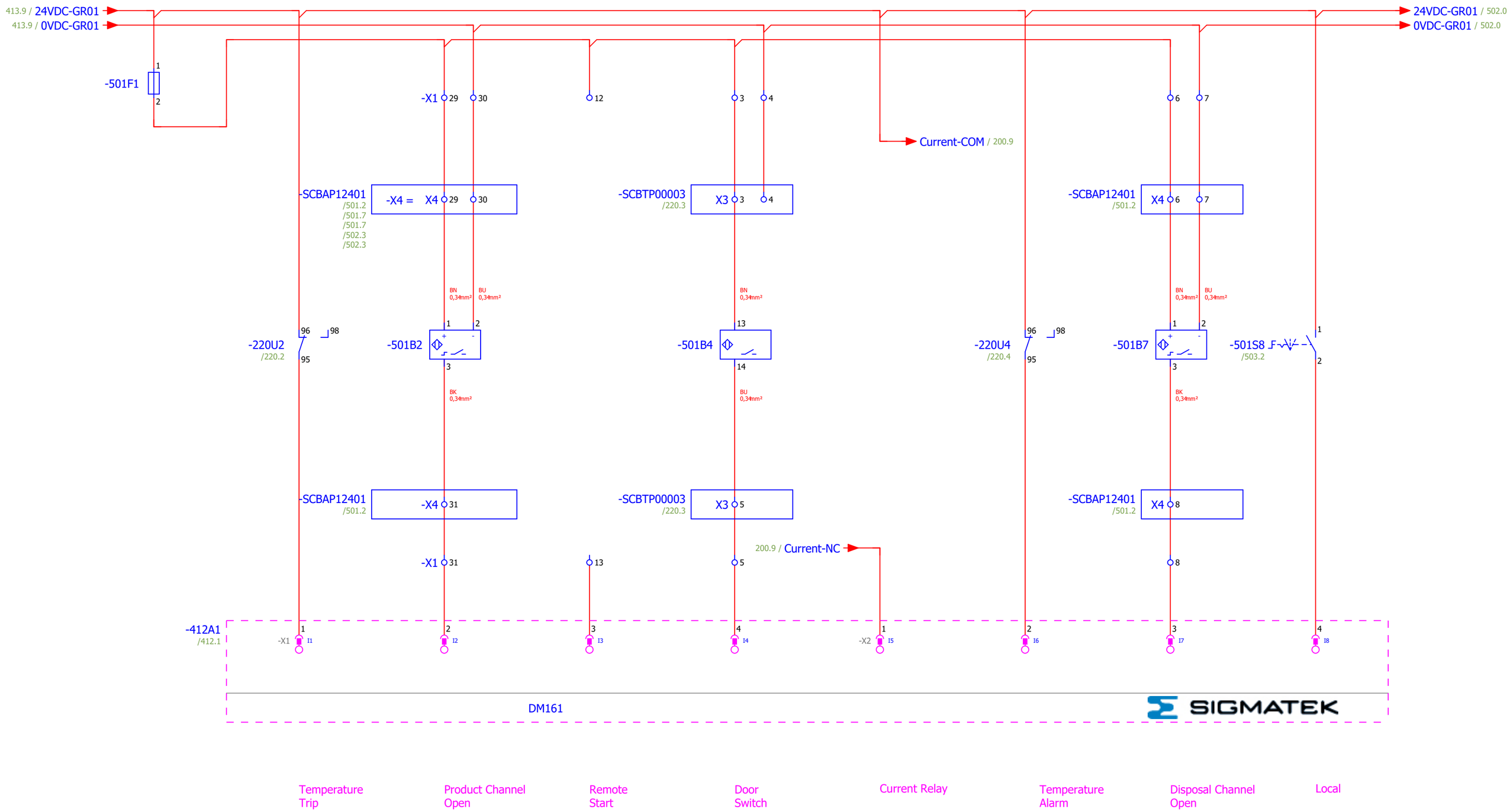

			Date	8-6-2023	Control box EM1-3 INCL. VALVE project Number xxxxx	Goudsmit Magnetic Systems	SPA-E-CB-NA-PLC-HW-PT1K0	PLC I/O Digital Inputs	=
			Ed.	mv		GOUDSMIT MAGNETICS	ESBP210001		+
			Appr.						Page 501
Modification	Date	Name	Original		Replacement of	Replaced by			Page 16 / 31

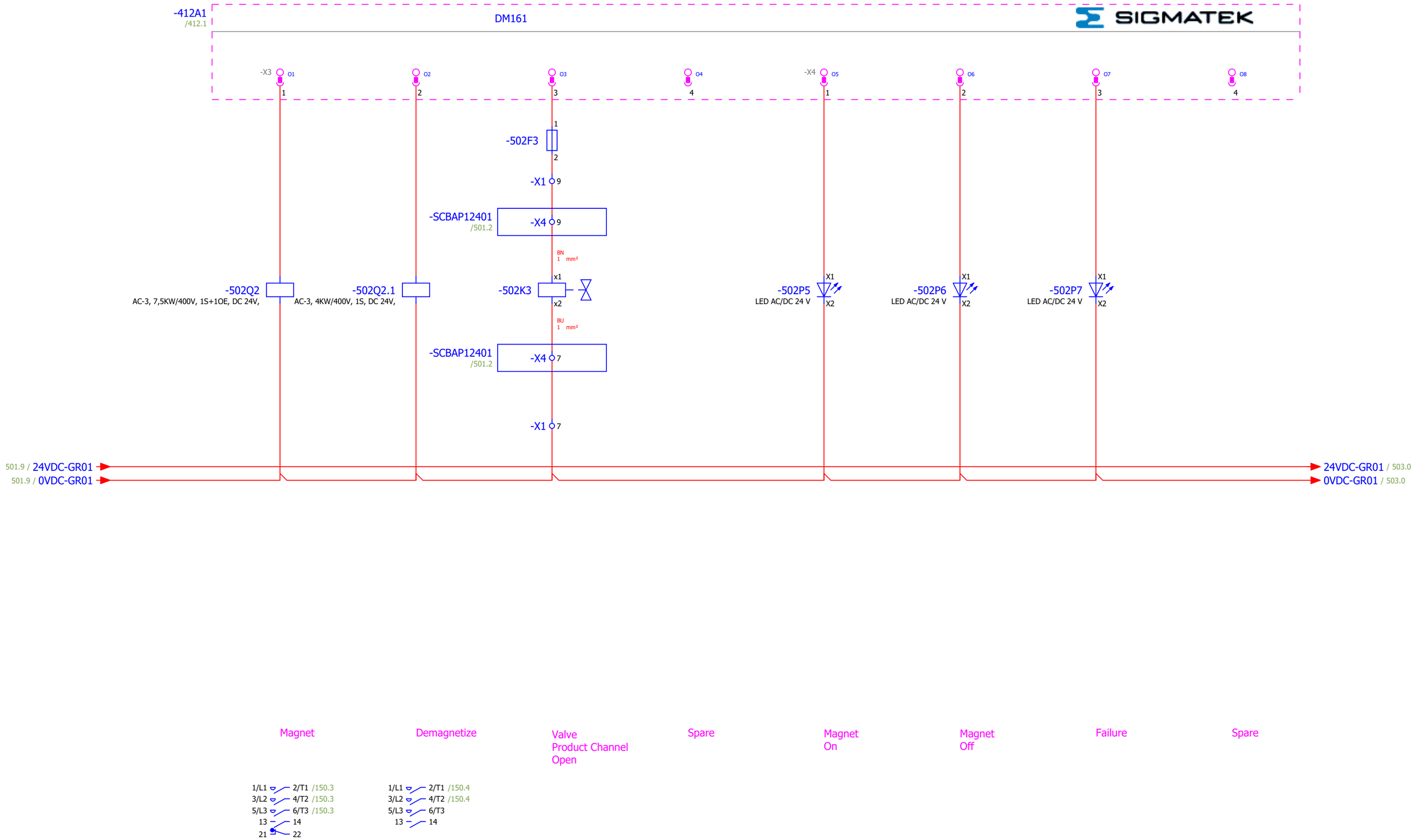

			Date	21-6-2023	Control box EM1-3 INCL. VALVE project Number xxxxx	Goudsmit Magnetic Systems GOUDSMIT MAGNETICS	SPA-E-CB-NA-PLC-HW-PT1K0 ESBP210001	PLC I/O Digital Outputs	=
			Ed.	mv					+
			Appr.						Page 502
Modification	Date	Name	Original		Replacement of	Replaced by			Page 17 / 31

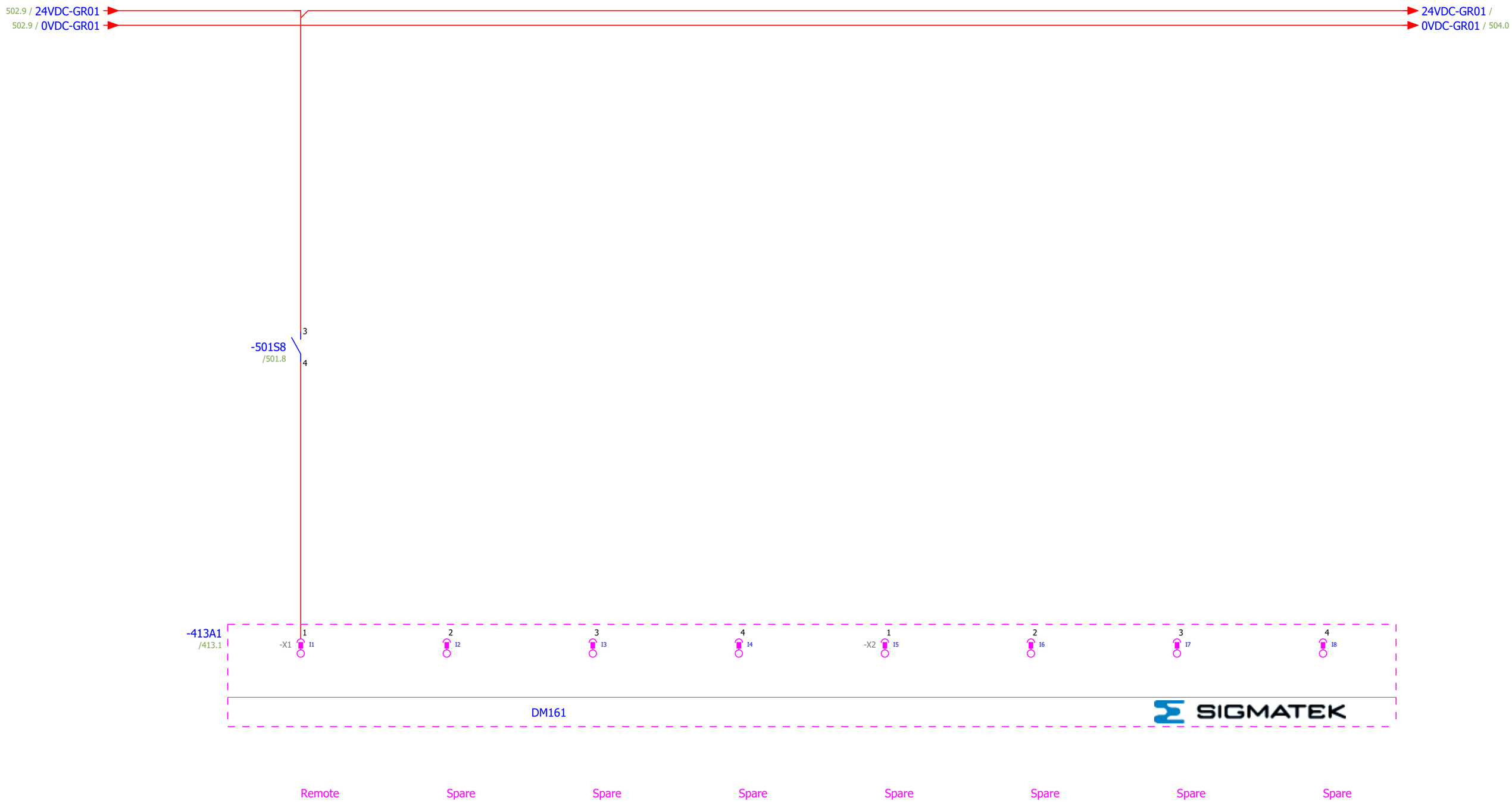

			Date	7-6-2023	Control box EM1-3 INCL. VALVE project Number xxxxx	Goudsmit Magnetic Systems GOUDSMIT MAGNETICS	SPA-E-CB-NA-PLC-HW-PT1K0 ESBP210001	PLC I/O Digital Inputs	=
			Ed.	mv					+
			Appr.						Page 503
Modification	Date	Name	Original		Replacement of	Replaced by			Page 18 / 31

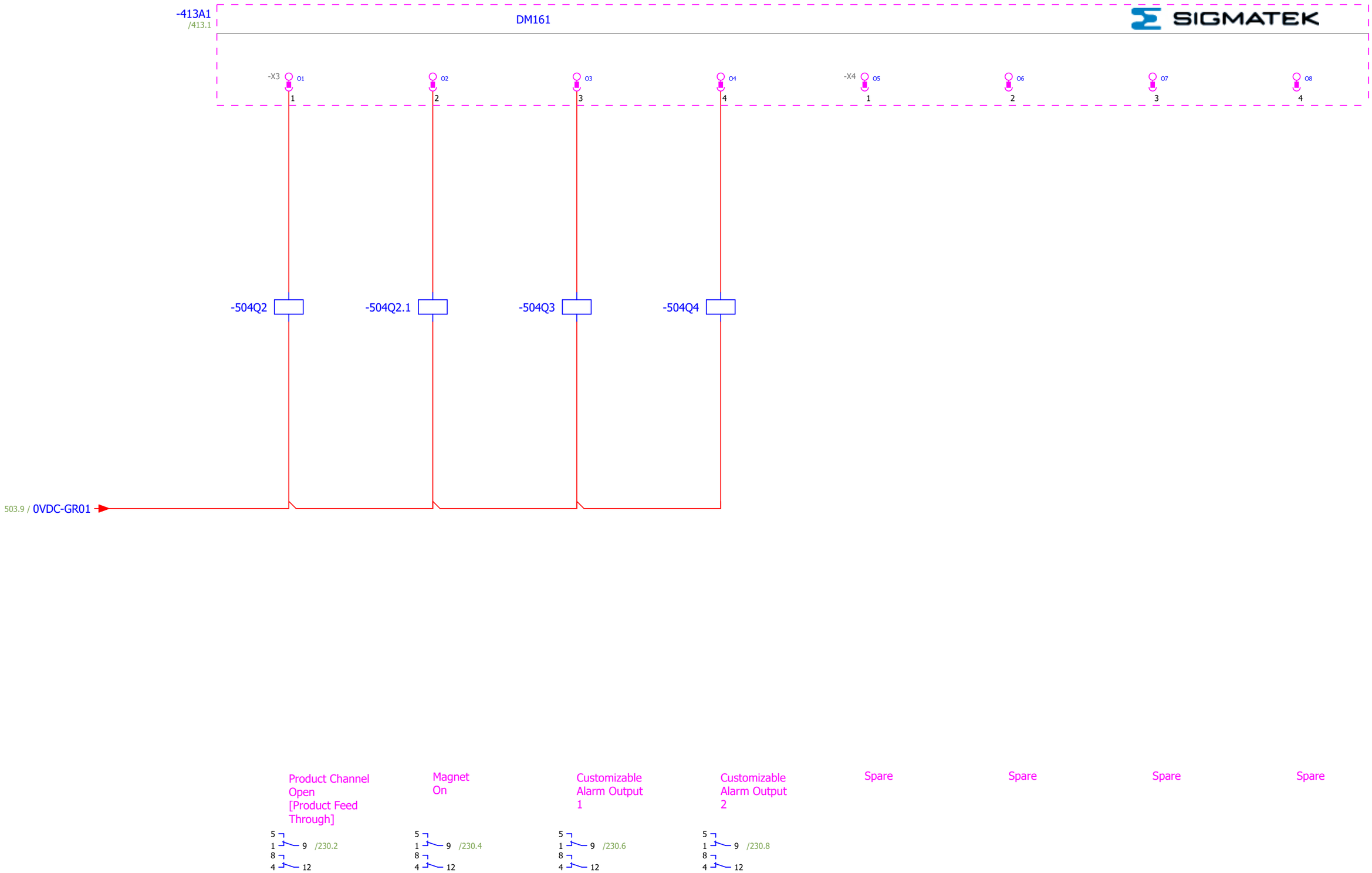

			Date	7-6-2023	Control box EM1-3 INCL. VALVE project Number xxxxx	Goudsmit Magnetic Systems	SPA-E-CB-NA-PLC-HW-PT1K0	PLC I/O Digital Outputs	=
			Ed.	mv		GOUDSMIT MAGNETICS	ESBP210001		+
			Appr.						Page 504
Modification	Date	Name	Original		Replacement of	Replaced by			Page 19 / 31

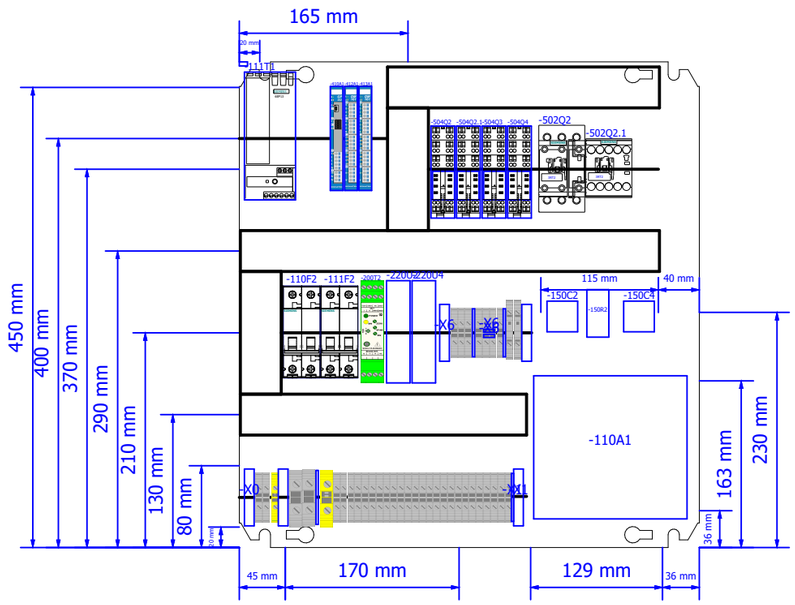

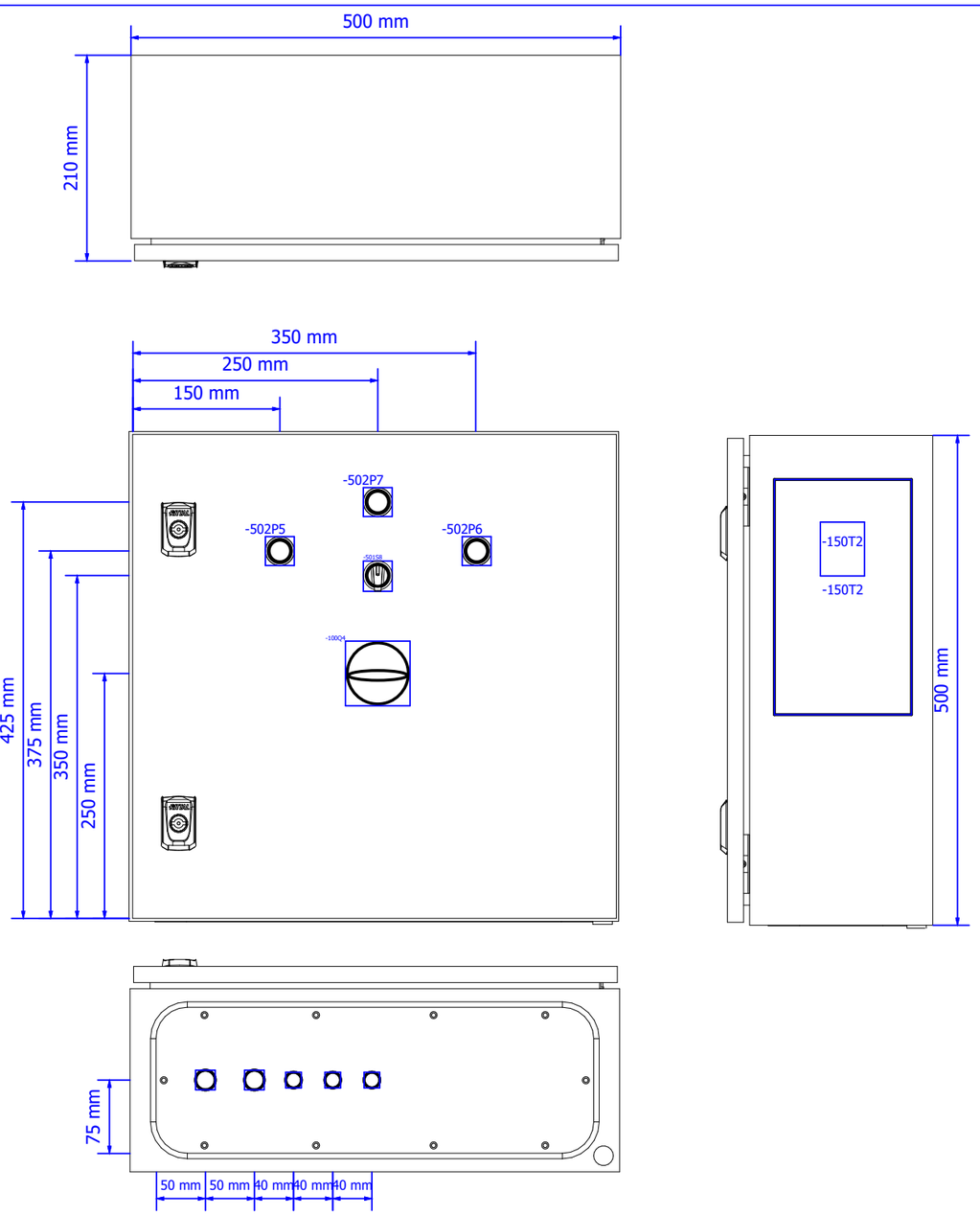

504

900

			Date	12-6-2023	Control box EM1-3 INCL. VALVE project Number xxxxx	Goudsmit Magnetic Systems GOUDSMIT MAGNETICS	SPA-E-CB-NA-PLC-HW-PT1K0 ESBP210001	Cabinet Layout	=	
			Ed.	mv					+	
			Appr.							Page 800
Modification	Date	Name	Original		Replacement of	Replaced by				Page 20 / 31

Bill of material

Quantity	Description	Type number	Part Number	Supplier	Isah Number
1	Compact enclosure AX	AX.1050000	1050000	Rittal	EI1D566403
1	VE1.0 1-PHASE TRANSFORMER	VE1.0	11191164	Jaspers Transformatoren	EIJA501K02
0					
1	S-DIAS CPU Module	CP102	20-004-102	Sigmatek	E0027409
2	S-DIAS Digital Mixed Module	DM161	20-008-161	Sigmatek	E0027373
1	CAPACITOR	450V1.5uF	450V1.5uF	Unknown brand	EIMB81K500
1	CAPACITOR	450V6.3uF	450V6.3uF	Unknown brand	EIMB86K300
1	CIRCUIT BREAKER 10KA 1+N-POL D10	5SY4510-8	5SY4510-8	Siemens	EIHD042005
1	CIRCUIT BREAKER 6KA1+N-POL C4	5SY6504-7	5SY6504-7	Siemens	E0029964
2	Fuse modular terminal block	UT 4-HESI (5X20) GY	3074169	Phoenix Contact	EI0J020003
2	5X20mm Fuse 0,5A Slow Acting	MI5T25V0,5	F219747Q	Ferraz	EIHF610212
1	LED MODULE, GREEN	3SU1401-1BB40-1AA0	3SU1401-1BB40-1AA0	Siemens	EIFD403002
1	INDICATOR LIGHT, GREEN	3SU1001-6AA40-0AA0	3SU1001-6AA40-0AA0	Siemens	EIFC050005
3	HOLDER	3SU1500-0AA10-0AA0	3SU1500-0AA10-0AA0	Siemens	EICH000022
1	LED MODULE, YELLOW	3SU1401-1BB30-1AA0	3SU1401-1BB30-1AA0	Siemens	EIFD403003
1	INDICATOR LIGHT, YELLOW	3SU1001-6AA30-0AA0	3SU1001-6AA30-0AA0	Siemens	EIFC050006
1	LED MODULE, RED	3SU1401-1BB20-1AA0	3SU1401-1BB20-1AA0	Siemens	EIFD403001
1	INDICATOR LIGHT, RED	3SU1001-6AA20-0AA0	3SU1001-6AA20-0AA0	Siemens	EIFC050007
1	Base mounting switch, On-Off switch, 90 degree, 20A, 2 pole, padlock, yellow/red	M220-61192-033N4	M220-61192-033N4	Salzer	EICB442605
1	CONTACTOR,AC3:7,5KW 1NO+1NC DC24V	3RT2025-1BB40	3RT2025-1BB40	Siemens	EIDB052001
1	CONTACTOR,AC3:4KW 1NO DC24V	3RT2016-1BB41	3RT2016-1BB41	Siemens	EIDB032001
4	Electromechanical relays, Industrial plug-in relays, MY	MY2IN DC24(S)	MY2IN DC24(S)	Omron	EIDF632004
4	Square Sockets	PYF08S	PYF08S	Omron	EIDK600004
1	Varistor	S14K60	S14K60	Epcos	EIKH176502
1	ROTARY CAM SWITCH 1X21A, H/0/A - FRONT MOUNTING IP66	M220-61025-003M1	5960025	Salzer	EICB442601
1	SITOP PSU100S	6EP1333-2BA20	6EP1333-2BA20	Siemens	EIPF240505
1	Bridge Rectifier	VBO30-16NO7	VBO30-16NO7	IXYS	EIKCDB3807
1	Heatsink250x140mm	Heatsink250x140mm	Heatsink250x140mm	TNR	E0093016
1	Current transducers	MCR-S10-50-UI-SW-DCI-NC	2814744	Phoenix Contact	EITW049000

Bill of material

Quantity	Description	Type number	Part Number	Supplier	Isah Number
2	PTC probe relay - LT3 with automatic reset	LT3SA00MW	LT3SA00MW	Schneider Electric	EIDC232000
3	Screwed cable gland (electr.) M16, Grey	ESKV 16	10066411	Wiska	EIYP090016
2	Screwed cable gland (electr.) M20, Grey	ESKV 20	10066412	Wiska	EIYP090020
6	End Clamb	CLIPFIX 35	3022218	Phoenix Contact	EI0M100002
4	End cover	D-UT 2,5/10	3047028	Phoenix Contact	EI0M040000
34	Feed-through terminal block	UT 4	3044102	Phoenix Contact	EI0J020002
1	Ground modular terminal block	UT 4-PE	3044128	Phoenix Contact	EI0J320000
2	Feed-through terminal block	UT 16	3044199	Phoenix Contact	EI0J050005
1	End cover	D-UT 16	3047206	Phoenix Contact	EI0M050005
1	Ground modular terminal block	UT 16-PE	3044212	Phoenix Contact	EI0J350002
2	Plug-in bridge	FBS 2-6	3030336	Phoenix Contact	EI0M320003

Components list

Device tag	Quantity	Description	Type number	Part number	Supplier	Isah number	Page/Path
-X1	2	End Clamb	CLIPFIX 35	3022218	Phoenix Contact	EI0M100002	/501.2
-100Q4	1	Base mounting switch, On-Off switch, 90 degree, 20A, 2 pole, padlock, yellow/red	M220-61192-033N4	M220-61192-033N4	Salzer	EICB442605	/100.2
-X0	2	End Clamb	CLIPFIX 35	3022218	Phoenix Contact	EI0M100002	/100.2
-X0	1	End cover	D-UT 2,5/10	3047028	Phoenix Contact	EI0M040000	/100.2
-X0	2	Feed-through terminal block	UT 4	3044102	Phoenix Contact	EI0J020002	/100.2
-X0	1	Ground modular terminal block	UT 4-PE	3044128	Phoenix Contact	EI0J320000	/100.2
-110A1	1	VE1.0 1-PHASE TRANSFORMER	VE1.0	11191164	Jaspers Transformatoren	EIJA501K02	/110.1
-110F2	1	CIRCUIT BREAKER 10KA 1+N-POL D10	5SY4510-8	5SY4510-8	Siemens	EIHD042005	/110.2
-X6	2	End Clamb	CLIPFIX 35	3022218	Phoenix Contact	EI0M100002	/110.1;/110.2
-X6	7	Feed-through terminal block	UT 4	3044102	Phoenix Contact	EI0J020002	/110.1.../110.3
-X6	2	End cover	D-UT 2,5/10	3047028	Phoenix Contact	EI0M040000	/110.2;/110.3
-X6	2	Plug-in bridge	FBS 2-6	3030336	Phoenix Contact	EI0M320003	/110.2
-111F2	1	CIRCUIT BREAKER 6KA1+N-POL C4	5SY6504-7	5SY6504-7	Siemens	E0029964	/111.2
-111T1	1	SITOP PSU100S	6EP1333-2BA20	6EP1333-2BA20	Siemens	EIPF240505	/111.1
-150C2	1	CAPACITOR	450V1.5uF	450V1.5uF	Unknown brand	EIMB81K500	/150.2
-150C4	1	CAPACITOR	450V6.3uF	450V6.3uF	Unknown brand	EIMB86K300	/150.4
-150R2	1	Varistor	S14K60	S14K60	Epcos	EIKH176502	/150.2
-150T2	1	Bridge Rectifier	VBO30-16NO7	VBO30-16NO7	IXYS	EIKCDB3807	/150.2
-150T2	1	Heatsink250x140mm	Heatsink250x140mm	Heatsink250x140mm	TNR	E0093016	/150.2
-X1	2	Feed-through terminal block	UT 16	3044199	Phoenix Contact	EI0J050005	/150.4
-X1	1	End cover	D-UT 16	3047206	Phoenix Contact	EI0M050005	/150.4
-X1	1	Ground modular terminal block	UT 16-PE	3044212	Phoenix Contact	EI0J350002	/150.5
-200T2	1	Current transducers	MCR-S10-50-UI-SW-DCI-NC	2814744	Phoenix Contact	EITW049000	/200.2
-220U2	1	PTC probe relay - LT3 with automatic reset	LT3SA00MW	LT3SA00MW	Schneider Electric	EIDC232000	/220.2
-220U4	1	PTC probe relay - LT3 with automatic reset	LT3SA00MW	LT3SA00MW	Schneider Electric	EIDC232000	/220.4
-X1	25	Feed-through terminal block	UT 4	3044102	Phoenix Contact	EI0J020002	/220.2.../220.5;/230.2;/230.4;/230.6;/230.8;/50
-410A1	1	S-DIAS CPU Module	CP102	20-004-102	Sigmatek	E0027409	/410.1
-412A1	1	S-DIAS Digital Mixed Module	DM161	20-008-161	Sigmatek	E0027373	/412.1
-413A1	1	S-DIAS Digital Mixed Module	DM161	20-008-161	Sigmatek	E0027373	/413.1
-501F1	1	Fuse modular terminal block	UT 4-HESI (5X20) GY	3074169	Phoenix Contact	EI0J020003	/501.1
-501F1	1	5X20mm Fuse 0,5A Slow Acting	MI5T25V0,5	F219747Q	Ferraz	EIHF610212	/501.1
-501S8	1	ROTARY CAM SWITCH 1X21A, H/0/A - FRONT MOUNTING IP66	M220-61025-003M1	5960025	Salzer	EICB442601	/501.8
-X1	1	End cover	D-UT 2,5/10	3047028	Phoenix Contact	EI0M040000	/501.2
-502F3	1	Fuse modular terminal block	UT 4-HESI (5X20) GY	3074169	Phoenix Contact	EI0J020003	/502.3
-502F3	1	5X20mm Fuse 0,5A Slow Acting	MI5T25V0,5	F219747Q	Ferraz	EIHF610212	/502.3
-502P5	1	LED MODULE, GREEN	3SU1401-1BB40-1AA0	3SU1401-1BB40-1AA0	Siemens	EIFD403002	/502.5
-502P5	1	INDICATOR LIGHT, GREEN	3SU1001-6AA40-0AA0	3SU1001-6AA40-0AA0	Siemens	EIFC050005	/502.5
-502P5	1	HOLDER	3SU1500-0AA10-0AA0	3SU1500-0AA10-0AA0	Siemens	EICH000022	/502.5
-502P6	1	LED MODULE, YELLOW	3SU1401-1BB30-1AA0	3SU1401-1BB30-1AA0	Siemens	EIFD403003	/502.6
-502P6	1	INDICATOR LIGHT, YELLOW	3SU1001-6AA30-0AA0	3SU1001-6AA30-0AA0	Siemens	EIFC050006	/502.6
-502P6	1	HOLDER	3SU1500-0AA10-0AA0	3SU1500-0AA10-0AA0	Siemens	EICH000022	/502.6
-502P7	1	LED MODULE, RED	3SU1401-1BB20-1AA0	3SU1401-1BB20-1AA0	Siemens	EIFD403001	/502.7
-502P7	1	INDICATOR LIGHT, RED	3SU1001-6AA20-0AA0	3SU1001-6AA20-0AA0	Siemens	EIFC050007	/502.7
-502P7	1	HOLDER	3SU1500-0AA10-0AA0	3SU1500-0AA10-0AA0	Siemens	EICH000022	/502.7
-502Q2	1	CONTACTOR,AC3:7,5KW 1NO+1NC DC24V	3RT2025-1BB40	3RT2025-1BB40	Siemens	EIDB052001	/502.2
-502Q2.1	1	CONTACTOR,AC3:4KW 1NO DC24V	3RT2016-1BB41	3RT2016-1BB41	Siemens	EIDB032001	/502.2
-504Q2	1	Electromechanical relays, Industrial plug-in relays, MY	MY2IN DC24(S)	MY2IN DC24(S)	Omron	EIDF632004	/504.2
-504Q2	1	Square Sockets	PYF08S	PYF08S	Omron	EIDK600004	/504.2
-504Q2.1	1	Electromechanical relays, Industrial plug-in relays, MY	MY2IN DC24(S)	MY2IN DC24(S)	Omron	EIDF632004	/504.2
-504Q2.1	1	Square Sockets	PYF08S	PYF08S	Omron	EIDK600004	/504.2
-504Q3	1	Electromechanical relays, Industrial plug-in relays, MY	MY2IN DC24(S)	MY2IN DC24(S)	Omron	EIDF632004	/504.3
-504Q3	1	Square Sockets	PYF08S	PYF08S	Omron	EIDK600004	/504.3
-504Q4	1	Electromechanical relays, Industrial plug-in relays, MY	MY2IN DC24(S)	MY2IN DC24(S)	Omron	EIDF632004	/504.4
-504Q4	1	Square Sockets	PYF08S	PYF08S	Omron	EIDK600004	/504.4
	1	Compact enclosure AX	AX.1050000	1050000	Rittal	EI1D566403	/800.1
-800U1	3	Screwed cable gland (electr.) M16, Grey	ESKV 16	10066411	Wiska	EIYP090016	/800.6

Components list

Device tag	Quantity	Description	Type number	Part number	Supplier	Isah number	Page/Path
-800U1	2	Screwed cable gland (electr.) M20, Grey	ESKV 20	10066412	Wiska	EIYP090020	/800.6

Terminal line-up diagram

F12_001

Part number					
Mounting rail			Strip label	End angle rear	End plate
Terminal					
Part number	Type number	Cross-section	Terminal label	Jumper	Cover

+-SCBAP12401-X4

'	6	
'	7	
'	7	
'	8	
'	9	
'	29	
'	30	
'	31	

921

941

			Date	7-6-2023	Control box EM1-3 INCL. VALVE project Number xxxxx	Goudsmit Magnetic Systems	SPA-E-CB-NA-PLC-HW-PT1K0	Terminal Plan	=
			Ed.	mv		GOUDSMIT MAGNETICS	ESBP210001		+
			Appr.						Page 940
Modification	Date	Name	Original		Replacement of	Replaced by			Page 25 / 31

Terminal line-up diagram

F12_001

Part number					
Mounting rail			Strip label	End angle rear	End plate
Terminal					
Part number	Type number	Cross-section	Terminal label	Jumper	Cover

+-SCBTP00003-X3

	1	
	2	
	3	
	4	
	5	
	20	
	21	
	A	
	B	
	PE	

Terminal line-up diagram

F12_001

Part number					
Mounting rail			Strip label	End angle rear	End plate
				PXC.3022218	PXC.3047028

Terminal					
Part number	Type number	Cross-section	Terminal label	Jumper	Cover
PXC.3022218	CLIPFIX 35				
PXC.3047028	D-UT 2,5/10				
PXC.3044102	UT 4	6			
PXC.3044102	UT 4	6			
PXC.3044128	UT 4-PE	6			
PXC.3022218	CLIPFIX 35				

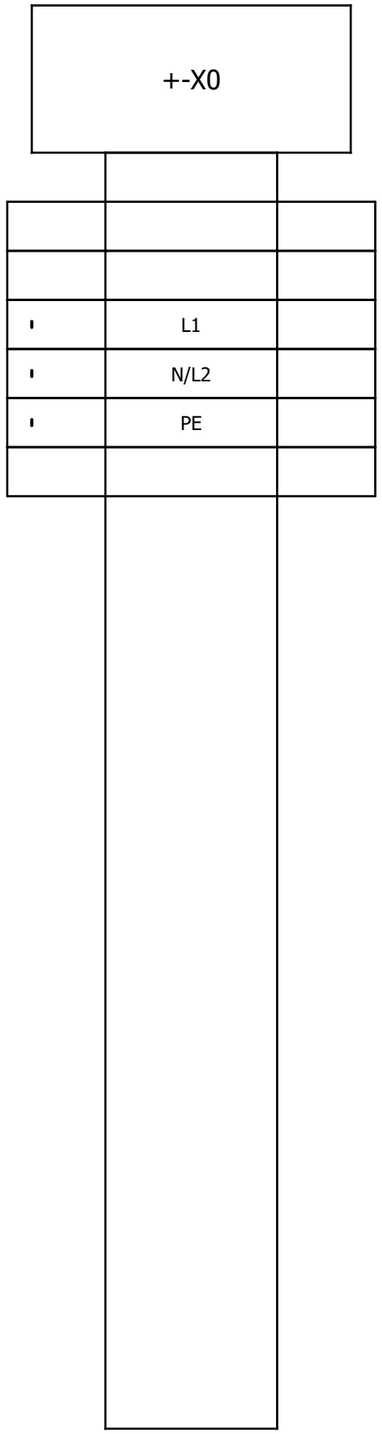

			Date	7-6-2023	Control box EM1-3 INCL. VALVE project Number xxxxx	Goudsmit Magnetic Systems	SPA-E-CB-NA-PLC-HW-PT1K0 ESBP210001
			Ed.	mv			
			Appr.				
Modification	Date	Name	Original		Replacement of	Replaced by	

Terminal Plan

=
+

Terminal line-up diagram

F12_001

Part number					
Mounting rail			Strip label	End angle rear	End plate
				PXC.3022218	

Terminal					
Part number	Type number	Cross-section	Terminal label	Jumper	Cover
PXC.3022218	CLIPFIX 35				
PXC.3044199	UT 16	25			
PXC.3044199	UT 16	25			
PXC.3047206	D-UT 16				
PXC.3044212	UT 16-PE	25			
PXC.3044102	UT 4	6			
PXC.3044102	UT 4	6			
PXC.3044102	UT 4	6			
PXC.3044102	UT 4	6			
PXC.3044102	UT 4	6			
PXC.3044102	UT 4	6			
PXC.3044102	UT 4	6			
PXC.3044102	UT 4	6			
PXC.3044102	UT 4	6			
PXC.3044102	UT 4	6			
PXC.3044102	UT 4	6			
PXC.3044102	UT 4	6			
PXC.3044102	UT 4	6			
PXC.3044102	UT 4	6			
PXC.3044102	UT 4	6			
PXC.3044102	UT 4	6			
PXC.3044102	UT 4	6			
PXC.3044102	UT 4	6			

+-X1		
'	A	
'	B	
'	PE	
'	1	
'	2	
'	3	
'	4	
'	5	
'	6	
'	7	
'	8	
'	9	
'	7	
'	12	
'	13	
'	14	
'	15	
'	16	
'	17	
'	18	
'	19	
'	20	
'	21	

Terminal line-up diagram

F12_001

Part number					
Mounting rail			Strip label	End angle rear	End plate
				PXC.3022218	
Terminal					
Part number	Type number	Cross-section	Terminal label	Jumper	Cover
PXC.3044102	UT 4	6			
PXC.3044102	UT 4	6			
PXC.3044102	UT 4	6			
PXC.3044102	UT 4	6			
PXC.3044102	UT 4	6			
PXC.3047028	D-UT 2,5/10				
PXC.3022218	CLIPFIX 35				

+-X1

'	27	
'	28	
'	29	
'	30	
'	31	

			Date	7-6-2023	Control box EM1-3 INCL. VALVE project Number xxxxx	Goudsmit Magnetic Systems	SPA-E-CB-NA-PLC-HW-PT1K0	Terminal Plan	=
			Ed.	mv		GOUDSMIT MAGNETICS	ESBP210001		+
			Appr.						Page 943.a
Modification	Date	Name	Original		Replacement of	Replaced by			Page 29 / 31

Terminal line-up diagram

F12_001

Part number					
Mounting rail			Strip label	End angle rear	End plate
				PXC.3022218	

Terminal					
Part number	Type number	Cross-section	Terminal label	Jumper	Cover
PXC.3022218	CLIPFIX 35				
PXC.3044102	UT 4	6			
PXC.3044102	UT 4	6			
PXC.3044102	UT 4	6			
PXC.3047028	D-UT 2,5/10				
PXC.3044102	UT 4	6			
PXC.3044102	UT 4	6		PXC.3030336	
PXC.3044102	UT 4	6		PXC.3030336	
PXC.3044102	UT 4	6			
PXC.3047028	D-UT 2,5/10				
PXC.3022218	CLIPFIX 35				

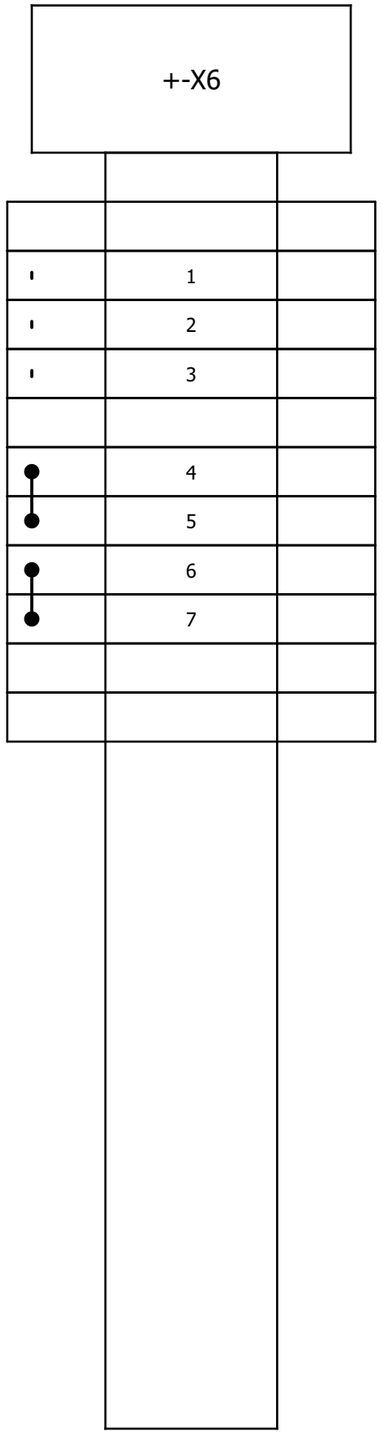

943.a

990

			Date	21-6-2023	Control box EM1-3 INCL. VALVE project Number xxxxx	Goudsmit Magnetic Systems	SPA-E-CB-NA-PLC-HW-PT1K0 ESBP210001	Terminal Plan	=
			Ed.	mv					+
			Appr.						Page 944
Modification	Date	Name	Original		Replacement of	Replaced by			Page 30 / 31

Textplates

RESOPALS

MAINSWITCH	-
-	-
-	-
-	-
-	-

TEXTPLATE

GOUDSMIT MAGNETICS

www.goudsmitmagnets.com

CONTROL BOX	**ESBP210001**
VOLTAGE:	110-230-400 VAC
CURRENT:	16 A
POWER:	1.0 kW

Goudsmit Magnetics, Petunialaan 19, 5582 HA, Waalre, The Netherlands
UK authorised prepresentative:
Goudsmit UK Ltd, 1st Floor, Riverview, The Green, Tullynacross Rd, Lisburn, BT27 5SR, United Kingdom

RESOPAL PROPERTIES	
Resopal dimension	45x15mm
Resopal color	White
Text color	Black