REV	DATE	BY	DESCRIPTION
A	23-9-2013	AvD	SEVERAL PARTS CHANGED
B	18-12-2013	AvD	VALVE BOX SIMPLIFIED, ITEM 16 (TYPE PLATE) ADDED
C	6-3-2017	CR	ITEM 17 ADDED

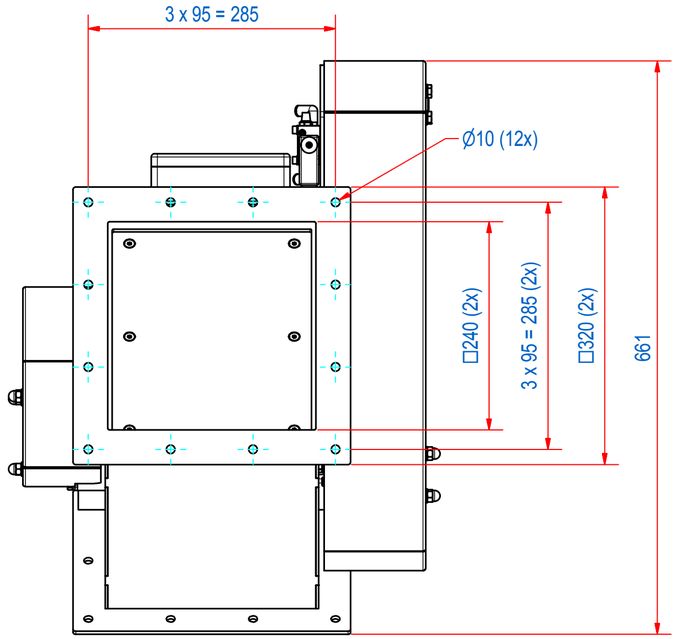

VIEW 'A' (FE-OUTLET)

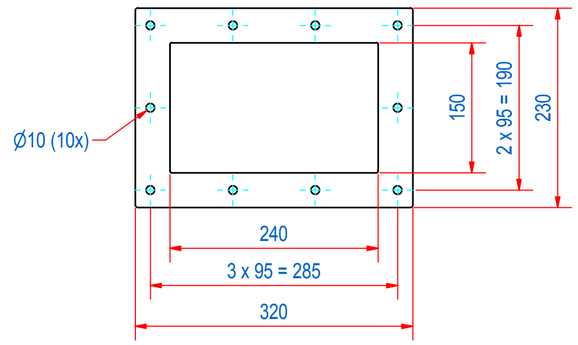

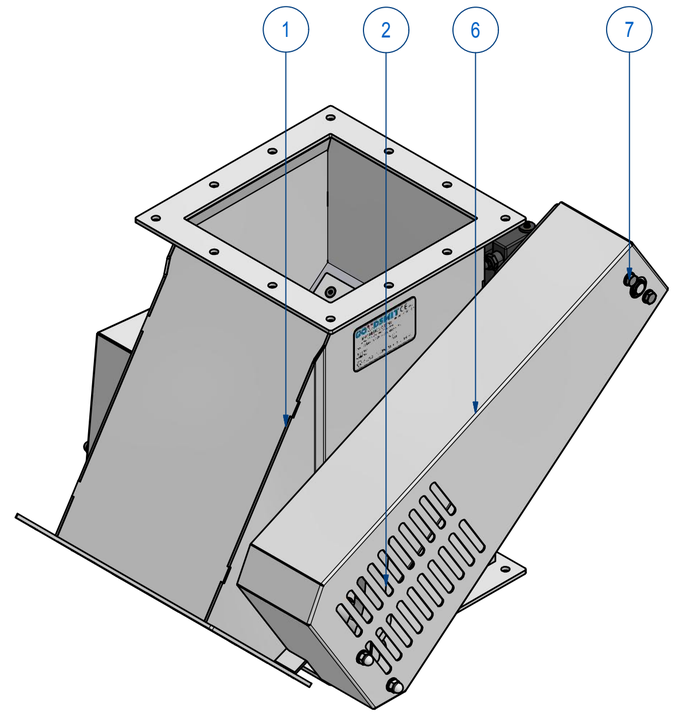

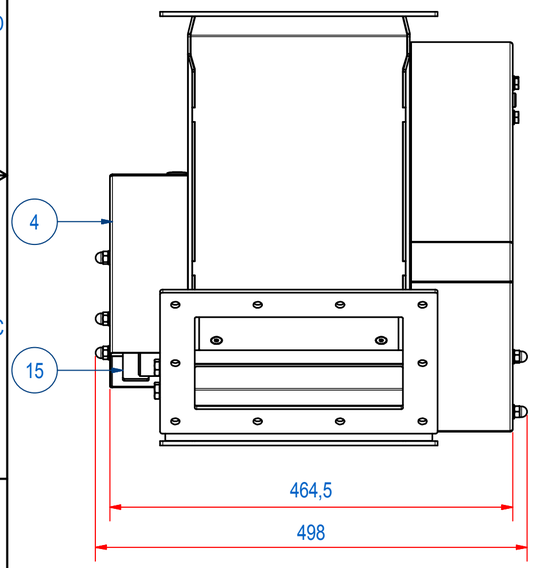

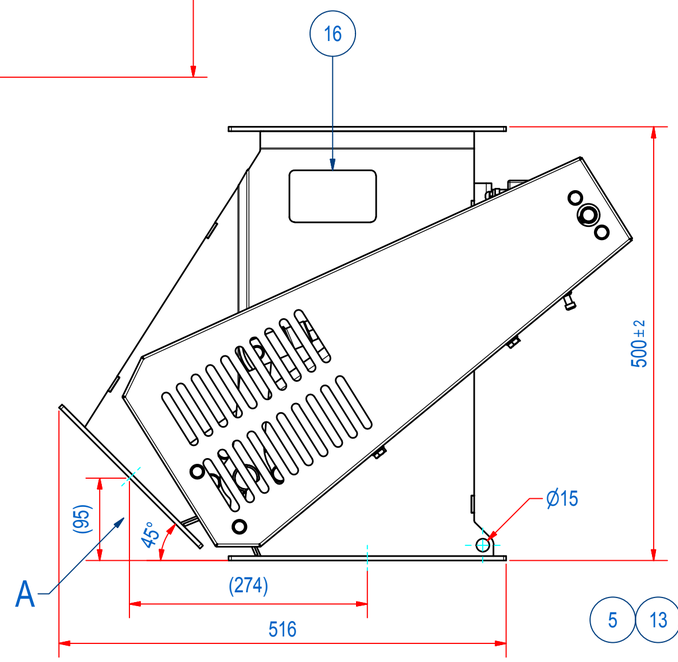

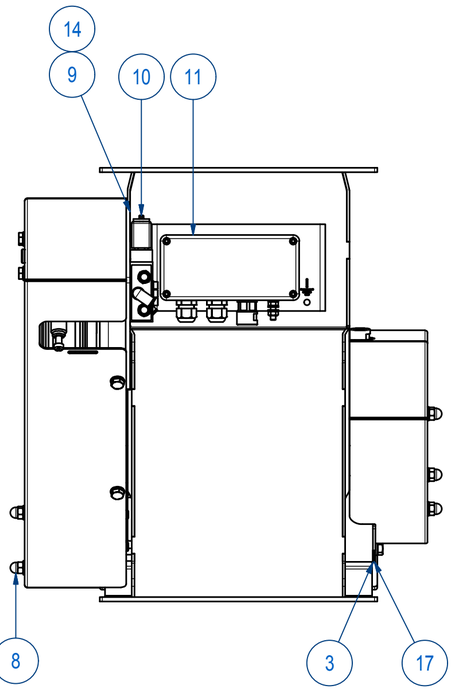

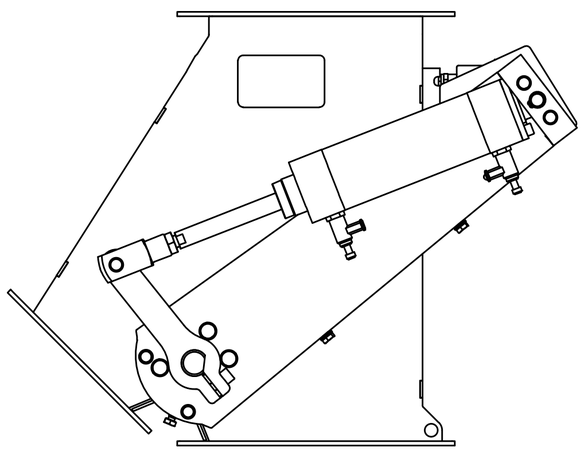

ITEM	QTY	PART NUMBER	DESCRIPTION	Dimensions
17	1	E0011138	AXLE PLATE SPKK000	
16	1	E0011691	SPKK _ _ ATEX II 1/2 D CE	
15	1	E0008591	POSITION PLATE KK000	
14	4	52.0208035	SCREW, HEX S CS M8x35 - A2	M8x35
13	2	E0004602	THREADED ROD M8x1.25 - AISI 304 - L110	M8-110
12	3	E0004603	THREADED ROD M8x1.25 - AISI 304 - L80	M8-80
11	1	SCBAP12400	CONTR BOX SPKK Ex II 2D	
10	1	A140204	5/2 SOLENOID[24VDC] EX II 2GD	
9	1	S140328	KK2424 COVER PLATE CYLINDER	
8	5	60.3200008	NUT, HEX CAP M8 - A2	M8
7	4	50.1208016	BOLT, HEX M8x16 - A2	M8x16
6	1	S140280	KK000 PROTECTION COVER	
5	9	70.0200008	WASHER M 8- A2	M 8
4	1	E0011117	KK000 PROTECTION PLATE	
3	1	A140233	KK000 POSITION SUPPORT	
2	1	E0009230	KK000 CYLINDER WITH SUPPORT	
1	1	A140266	VALVE BOX #240 H500 EX ASSY	

RAW MAT.	QTY	MAT. NUMBER	MAT. DESCRIPTION	LENGTH (mm)	WIDTH (mm)
	1				

Sheet: A2	Extra info:	General tolerance:	ISO 2768- mK
Drawn: A vD	Weight (kg): 43,8	Drawn according:	ISO268; ISO1101; ISO2553
Date: 24-4-2013	GOUDSMIT MAGNETIC SYSTEMS	Status:	Standard
Spare part:	False	Customer reference number:	
Quick search:	KK2424	File number: SPKK240006	Rev: C
Description:	SPKK-S-240-500-C-Ex	Part number: SPKK240006	Rev: C

© All rights reserved. Reproduction is not permitted without written permission of GOUDSMIT Magnetic Systems BV