REV	DATE	BY	DESCRIPTION
C	13-11-2013	AvD	VALVE CHANGED
D	7-1-2014	AvD	TYPE PLATE ADDED
E	6-3-2017	CR	ITEM 11 ADDED

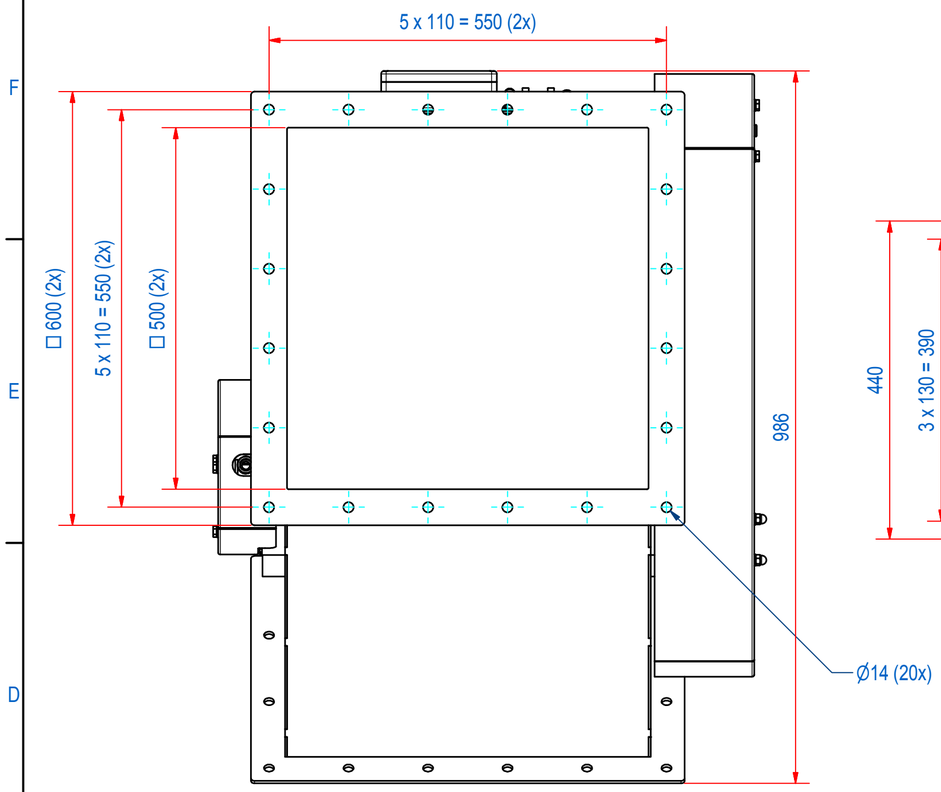

VIEW 'A' (FE-OUTLET)

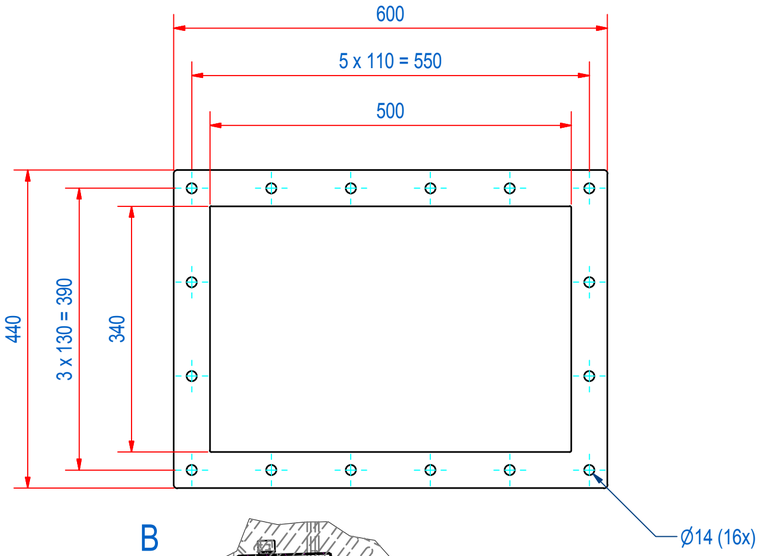

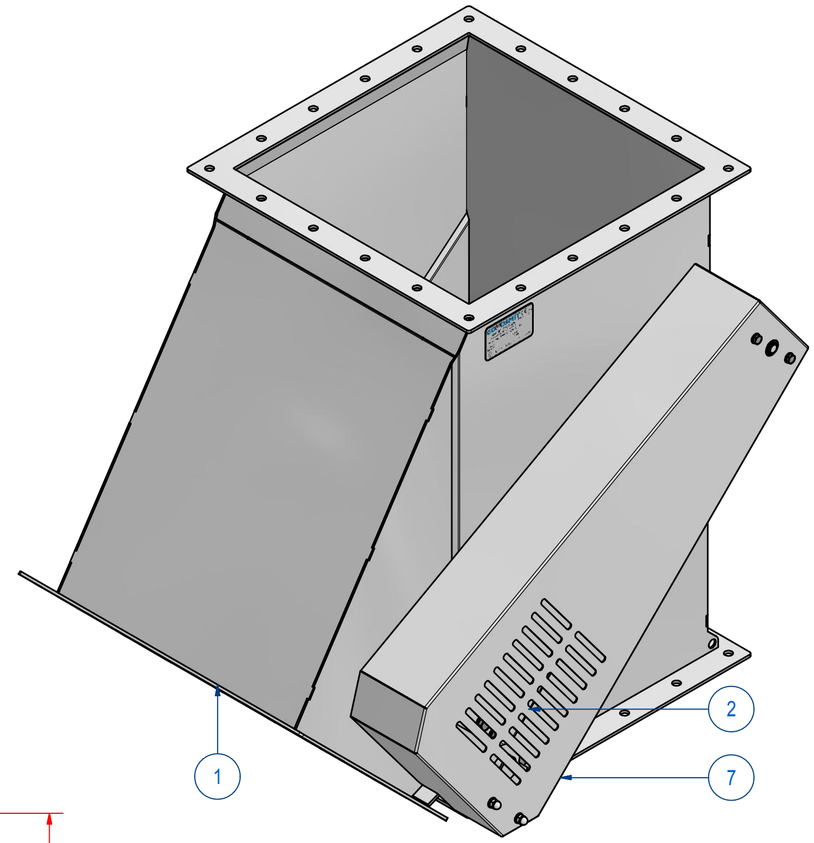

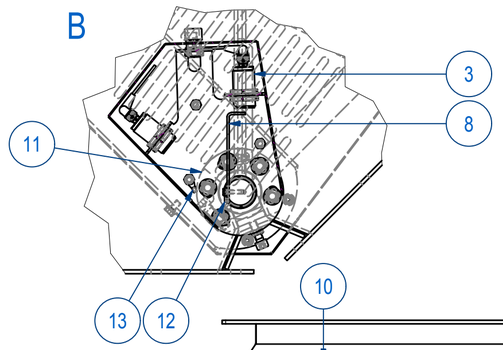

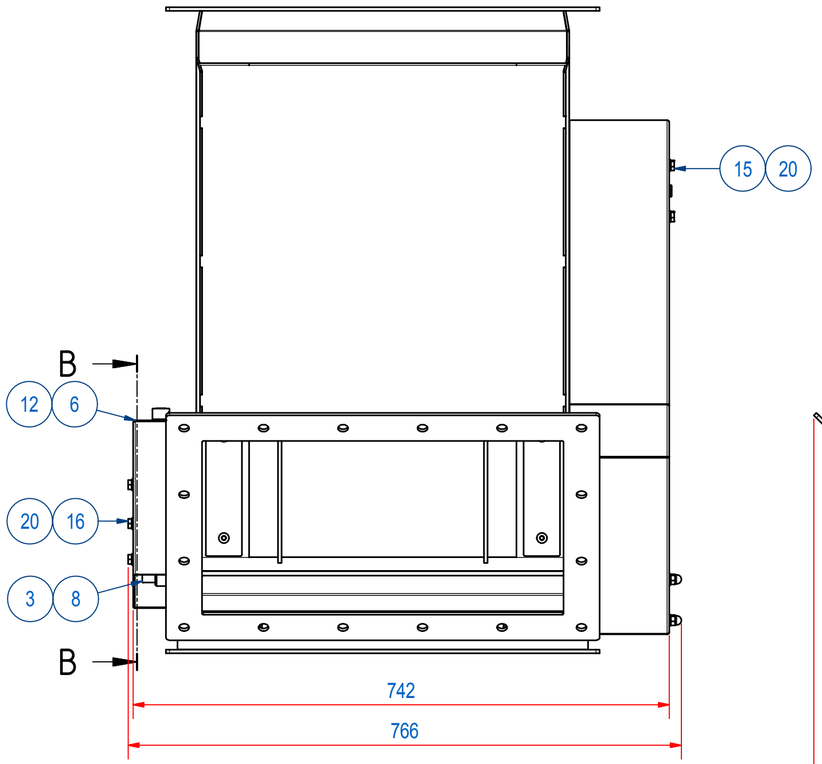

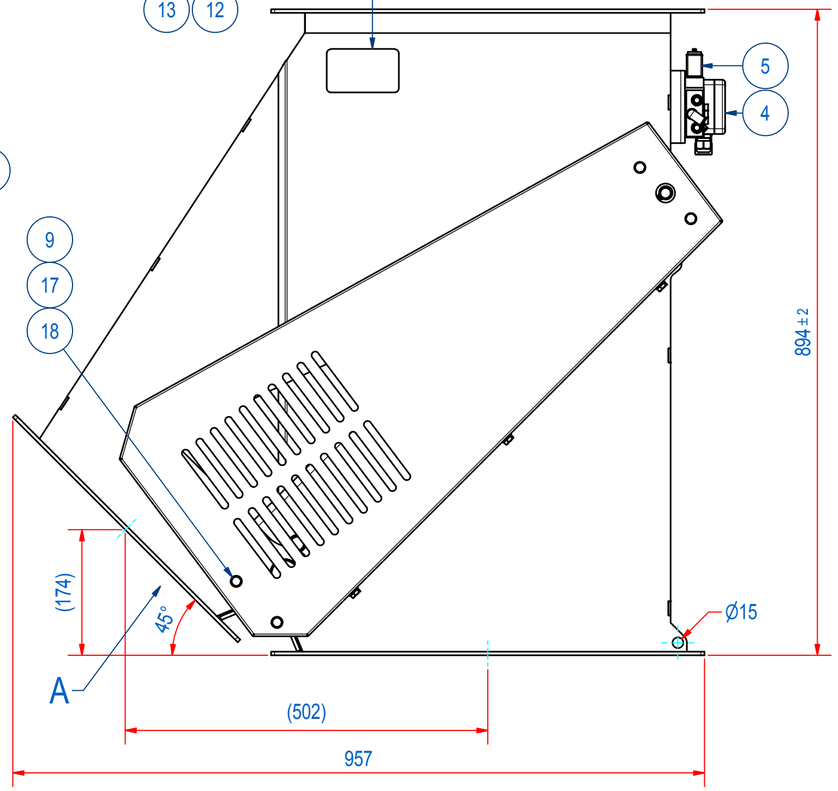

ITEM	QTY	PART NUMBER	DESCRIPTION	Dimensions
20	10	70.0200008	WASHER M 8- A2	M 8
19	1	70.0200005	WASHER M 5- A2	M 5
18	2	60.3200008	NUT, HEX CAP M8 - A2	M8
17	2	60.0200008	NUT, HEX M8 - A2	M8
16	3	50.1208070	BOLT, HEX M8x70 - A2	M8x70
15	5	50.1208016	BOLT, HEX M8x16 - A2	M8x16
14	1	50.1205025	BOLT, HEX M5x25 - A2	M5x25
13	1	EI0A015001	RING TONGUE M8 2.5mm2 BLUE	
12	1	EI0A013001	RING TONGUE M5 2.5mm2 BLUE	
11	1	E0009168	AXLE PLATE SPKK000	
10	1	E0011691	SPKK___ATEX II 1/2 D CE	
9	2	E0006253	THREADED ROD M8x1.25 - AISI 304 - L130	M8-130
8	1	E0008591	POSITION PLATE KK000	
7	1	S140306	KK000 PROTECTION COVER	
6	1	S140322	KK000 PROTECTION PLATE	
5	1	A140204	5/2 SOLENOID[24VDC] EX II 2GD	
4	1	SCBAP12400	CONTR BOX SPKK Ex II 2D	
3	1	A140248	POSITION SUPPORT KK000	
2	1	A140250	CYLINDER WITH SUPPORT KK000	
1	1	E0010238	VALVE BOX #500 H894 EX ASSY	

RAW MAT.	QTY	MAT. NUMBER	MAT. DESCRIPTION	LENGTH (mm)	WIDTH (mm)
	1				

Sheet: A2	Extra info:	General tolerance:	ISO 2768- mK
Drawn: A vD	Weight (kg): 123,5	Drawn according:	ISO268; ISO1101; ISO2553
Date: 20-6-2013	GOUDSMIT MAGNETIC SYSTEMS	Status:	Standard
Spare part: False		Customer reference number:	
Quick search: KK5050		File number: SPKK500006	Rev: E
Description: SPKK-S-500-900-C-Ex		Part number: SPKK500006	Rev: E

® All rights reserved. Reproduction is not permitted without written permission of GOUDSMIT Magnetic Systems BV