DOC.NR.	REV	DATE	BY	DESCRIPTION
E0135350	-	3-9-2020	AvD	REFERENCE DRAWING E0133365 <MASTER MODEL>
SSFI005038	A	15-10-2020	AvD	CHANGED FILTER PARTS

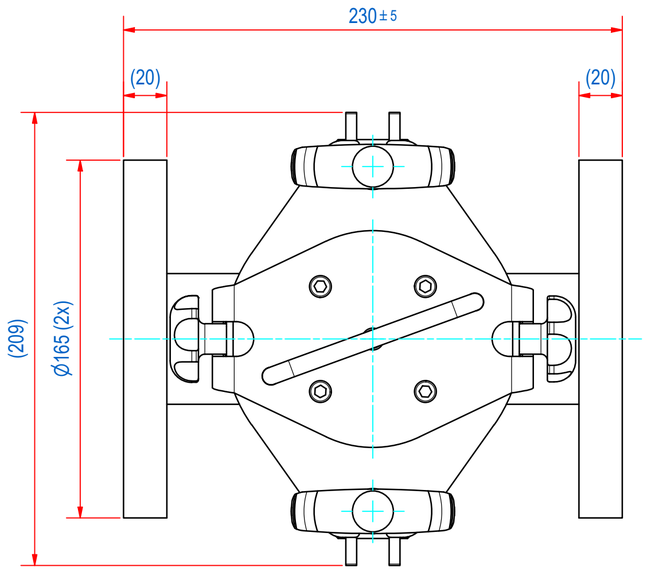

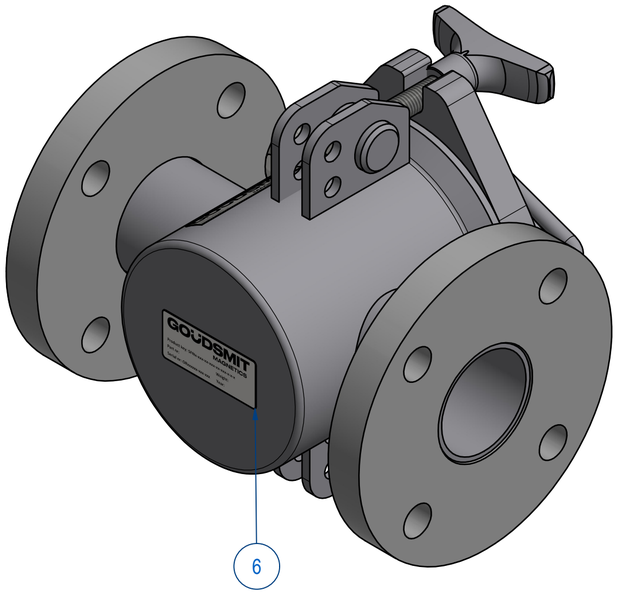

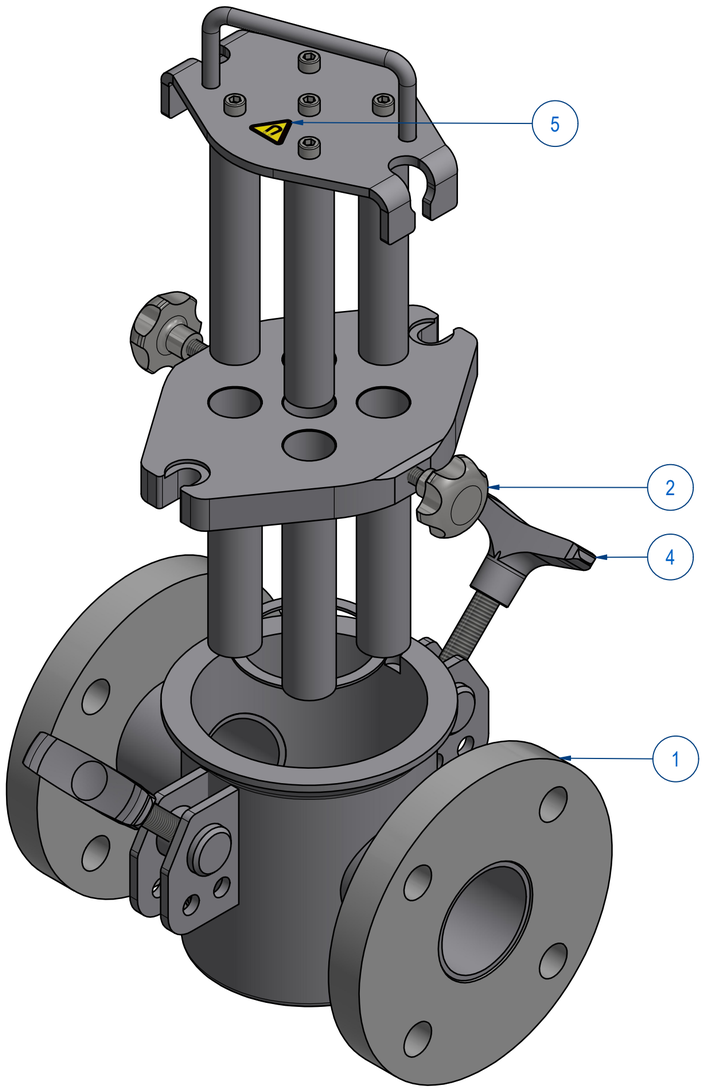

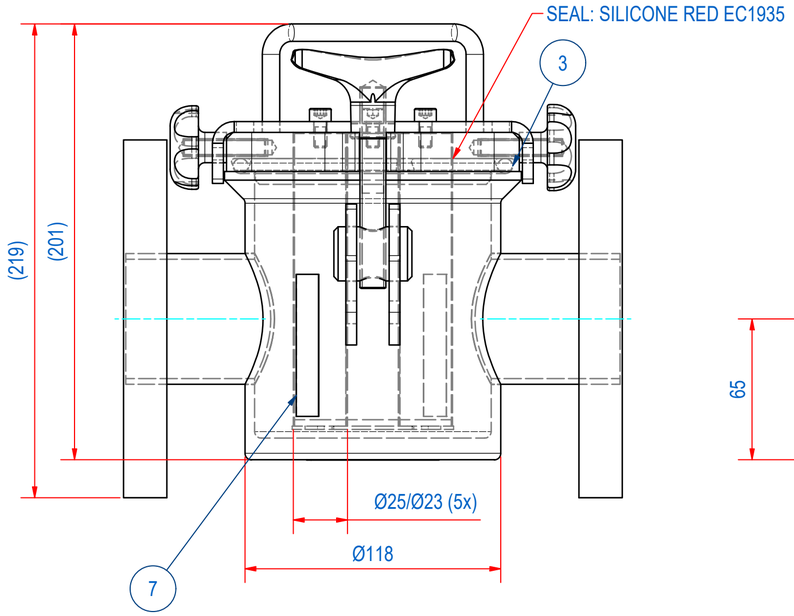

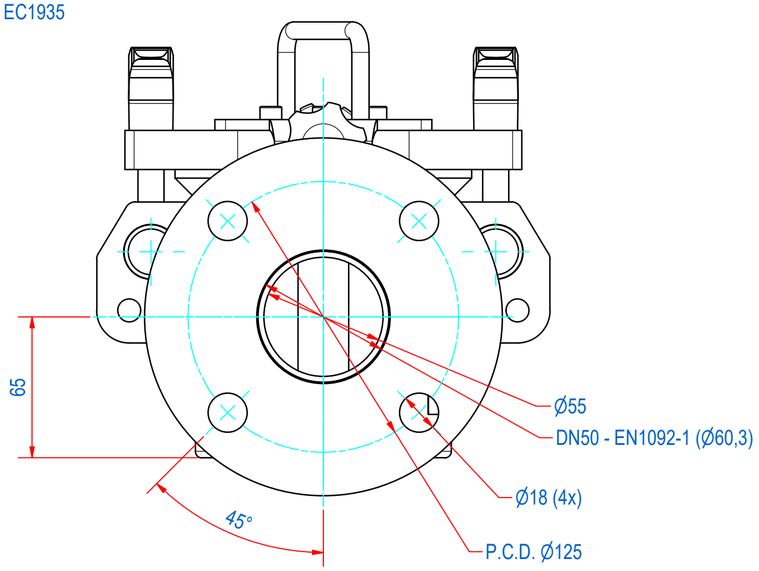

ITEM	QTY	PART NUMBER	DESCRIPTION	Dimensions
7	2	E0093605	STICKER SFN-050 GSM	
6	1	E0086453	TYPE PLATE FILTER SFN___	
5	1	1000.20080	STICKER MAGNETIC FIELD 20mm	
4	2	E0134041	TOGGLE M12 SFI-000	
3	1	78.1116700	O-RING Ø116,84x7 EC1935 SILIC.RED	
2	1	E0134168	FILTERTOP SFI-000-05E-HT	
1	1	E0133068	SFI-050 FILTER HOUSE EN1092-1	

RAW MAT.	Quantity	Material Number	Material Description	Length (mm)	Width (mm)
	1				

Sheet: A2	Extra info: MAGNETIC FILTER		General tolerance: ISO 2768- mK
Drawn: AvD	Weight (kg): 15		Drawn according: ISO268; ISO1101; ISO2553
Date: 2-9-2020		GOUDSMIT MAGNETICS	Status: Released
Spare part: False	Source:		Customer reference number:
Quick search: SFI050		® All rights reserved. Reproduction is not permitted without written permission of GOUDSMIT Magnetic Systems BV	Document number: SSFI005038 — Doc.Rev: A
Description: SFI-050-IF-05E-HT-F1m-S-B-B-B			Part number: SSFI005038 — Rev: A